MINOR SITE PLAN FOR

CHIPOTLE & STARBUCKS

MEDWAY COMMONS

67C MAIN STREET MEDWAY, MASSACHUSETTS

PARCELS 41-023-067A & B, CENTRAL BUSINESS ZONE

DECEMBER 22, 2022

LAST REVISED: FEBRUARY 24, 2023

APPROVED BY: TOWN OF MEDWAY PLANNING AND ECONOMIC DEVELOPMENT BOARD
APPROVAL DATE:
ENDORSEMENT DATE:

LIST OF DRAWINGS

SHEET NO.	SHEET TITLE
	COVER
1 OF 2	ALTA/NSPS LAND TITLE SURVEY (BY R.E. CAMERON & ASSOCIATES, INC.)
2 OF 2	ALTA/NSPS LAND TITLE SURVEY (BY R.E. CAMERON & ASSOCIATES, INC.)
C-100	OVERALL SITE PLAN
C-101	DEMOLITION PLAN
C-102	SITE PLAN
C-103	UTILITY, GRADING, DRAINAGE, & EROSION CONTROL PLAN
C-104	LANDSCAPE PLAN
C-105	CIRCULATION PLAN
C-501	EROSION CONTROL NOTES & DETAILS
C-502	DETAILS
C-503	DETAILS
C-504	DETAILS
A201	EXISTING ELEVATIONS (BY SCOTT GRIFFIN ARCHITECTS)
A202	PROPOSED ELEVATIONS (BY SCOTT GRIFFIN ARCHITECTS)
A203	PROPOSED ELEVATIONS COLORED (BY SCOTT GRIFFIN ARCHITECTS)
A204	3D PERSPECTIVES (BY SCOTT GRIFFIN ARCHITECTS)

WAIVER REQUEST:

THE FOLLOWING IS A WAIVER REQUEST FROM THE TOWN OF MEDWAY'S SITE PLAN RULES AND REGULATIONS

1. ARTICLE V SECTION 205-4 - ALL EXISTING AND PROPOSED ELEVATIONS SHALL REFER TO NAVD88.

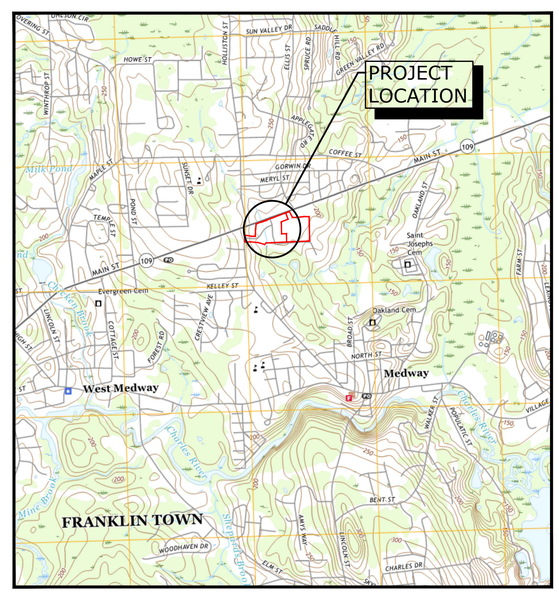

LOCATION MAP
SCALE: 1" = 2000'

PREPARED BY:

Tighe&Bond
Engineers | Environmental Specialists
177 Corporate Drive
Portsmouth, NH 03801
(603) 433-8818

PREPARED FOR:

Charter Realty & Development
1666 Massachusetts Ave - Suite 6A
Lexington, Massachusetts 02420

PREPARED WITH:

Scott Griffin Architects
880 Main Street 5th Floor
Waltham, Massachusetts 02451

PERMIT SET - NOT FOR CONSTRUCTION

COMPLETE SET 17 SHEETS

PROJECT NO: C1026-023

Last Saved: 2/23/2023
Plotted On:Feb 23, 2023-3:09pm By: JWinston
Tighe & Bond:J:\C\C1026 Charter Realty - Conceptual Sites\C1026-023 Medway Commons Starbucks\Drawings\AutoCAD\Sheet\C1026-018_COVR.dwg

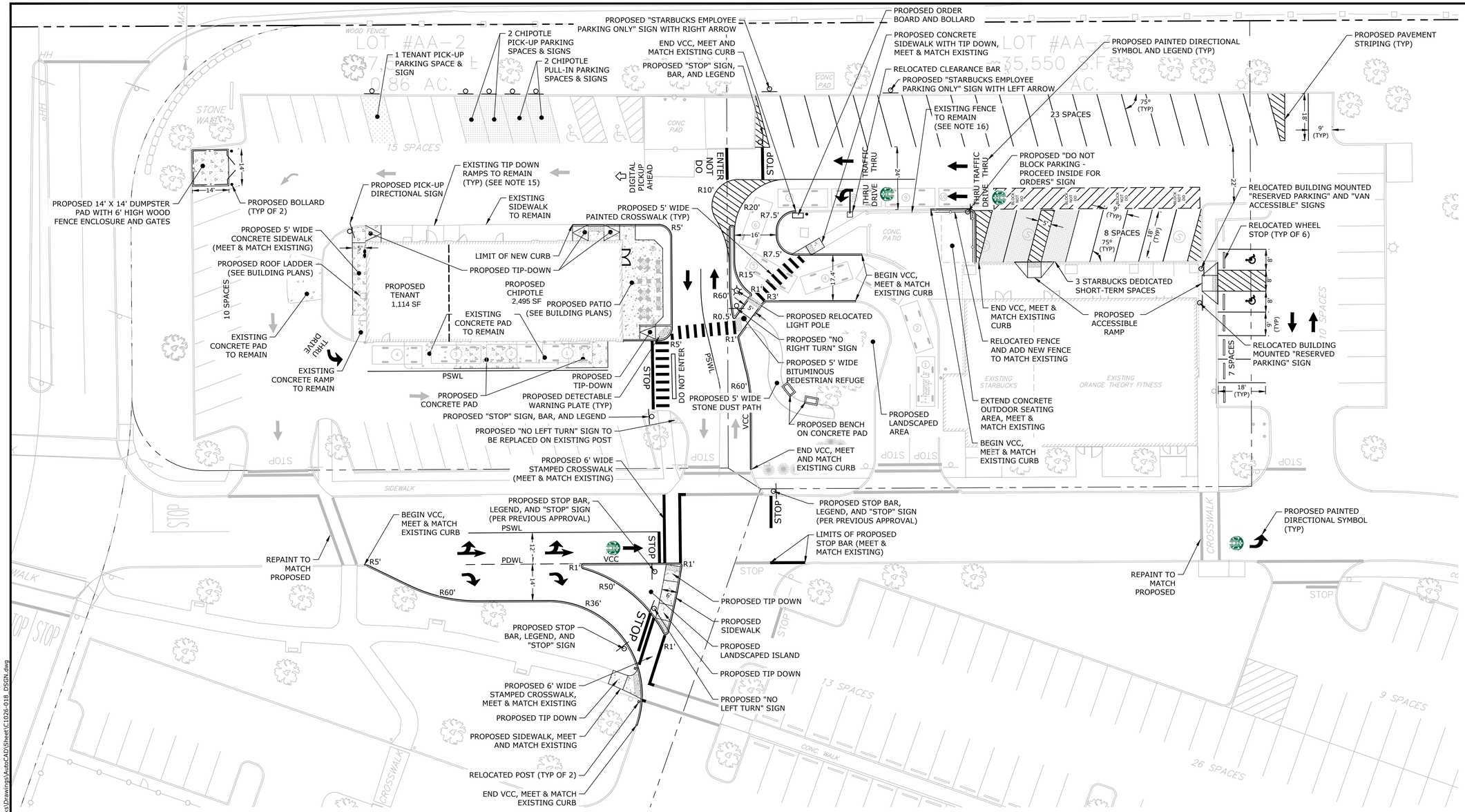

SITE NOTES:

1. STRIPE PARKING AREAS AS SHOWN, INCLUDING PARKING SPACES, AND ADA SYMBOLS. PAINT SHALL BE FAST DRYING AND SHALL MEET THE REQUIREMENTS OF AASHTO AASHTO M249. ALL TRAFFIC PAINT SHALL MEET THE REQUIREMENTS OF AASHTO M248 TYPE "F".
2. ALL PAVEMENT MARKINGS AND REGULATORY SIGNS, TO CONFORM TO "MANUAL ON UNIFORM TRAFFIC CONTROL DEVICES", "STANDARD ALPHABETS FOR HIGHWAY SIGNS AND PAVEMENT MARKINGS", AND THE AMERICANS WITH DISABILITIES ACT REQUIREMENTS, LATEST EDITIONS.
3. SEE DETAILS FOR PARKING STALL MARKINGS, ADA SYMBOLS, SIGNS AND SIGN POSTS.
4. THE CONTRACTOR SHALL EMPLOY A MASSACHUSETTS LICENSED LAND SURVEYOR TO DETERMINE ALL LINES AND GRADES.
5. CLEAN AND COAT VERTICAL FACE OF EXISTING PAVEMENT AT SAW CUT LINE WITH RS-1 EMULSION IMMEDIATELY PRIOR TO PLACING NEW BITUMINOUS CONCRETE.
6. ALL MATERIALS AND CONSTRUCTION SHALL CONFORM WITH APPLICABLE FEDERAL, STATE, AND LOCAL CODES & SPECIFICATIONS.
7. CONTRACTOR TO SUBMIT AS-BUILT PLANS IN DIGITAL FORMAT (.DWG AND .PDF FILES) ON DISK TO THE OWNER AND ENGINEER UPON COMPLETION OF THE PROJECT. AS-BUILTS SHALL BE PREPARED AND CERTIFIED BY A MASSACHUSETTS LICENSED LAND SURVEYOR.
8. ALL WORK SHALL CONFORM TO THE TOWN OF MEDWAY DEPARTMENT OF PUBLIC WORKS, STANDARD SPECIFICATIONS AND WITH THE STATE OF MASSACHUSETTS DEPARTMENT OF TRANSPORTATION, "STANDARD SPECIFICATIONS FOR HIGHWAYS AND BRIDGES", CURRENT EDITION.
9. ALL DIMENSIONS ARE TO THE FACE OF CURB UNLESS OTHERWISE NOTED.
10. CONTRACTOR TO PROVIDE FENCING TO PROTECT THE PUBLIC USING THE PLAZA DURING CONSTRUCTION.
11. CENTERLINES SHALL BE FOUR (4) INCH WIDE YELLOW LINES. STOP BARS SHALL BE EIGHTEEN (18) INCHES WIDE.
12. PAINTED ISLANDS SHALL BE FOUR (4) INCH WIDE DIAGONAL LINES AT 3'-0" O.C. BORDERED BY FOUR (4) INCH WIDE LINES.
13. SEE ARCHITECTURAL/BUILDING DRAWINGS FOR ALL CONCRETE PADS & SIDEWALKS ADJACENT TO BUILDING.
14. COORDINATE ALL WORK ADJACENT TO BUILDING WITH BUILDING CONTRACTOR.
15. TIP DOWN RAMPS TO REMAIN AROUND THE PROPOSED CHIPOTLE ARE APPROXIMATE.
16. EXISTING FENCE TO REMAIN AROUND THE OUTDOOR SEATING AREA AT STARBUCKS IS APPROXIMATE.
17. WHEEL STOPS TO BE PINNED THROUGH ASPHALT PAVEMENT USING ⅝" DOWELS AND CENTERED IN PARKING SPACE.

LEGEND

•	PROPOSED BOLLARD
5'R	RADIUS
TYP	TYPICAL
VCC	VERTICAL CONCRETE CURB
	ACCESSIBLE PAVEMENT MARKING
	PROPOSED SIGN
PDWL	PROPOSED DASHED WHITE LINE
PSWL	PROPOSED SOLID WHITE LINE
	PROPOSED PAVEMENT MARKINGS
	PROPOSED DETECTABLE WARNING PLATE
	EXISTING FENCE
	PROPOSED FENCE
	PROPOSED EDGE OF PAVEMENT/CURB
	EXISTING CONCRETE
	PROPOSED CONCRETE
	PROPOSED PAINTED ISLAND
	PROPOSED PAVEMENT

WAIVER REQUEST:

THE FOLLOWING IS A WAIVER REQUEST FROM THE TOWN OF MEDWAY'S SITE PLAN RULES AND REGULATIONS

1. ARTICLE V SECTION 205-4 - ALL EXISTING AND PROPOSED ELEVATIONS SHALL REFER TO NAVD88.

APPROVED BY:
TOWN OF MEDWAY PLANNING AND ECONOMIC DEVELOPMENT BOARD

APPROVAL DATE:

ENDORSEMENT DATE:

0 20' 40'
GRAPHIC SCALE

Tighe&Bond

PERMIT PLANS - NOT FOR CONSTRUCTION

MINOR SITE PLAN FOR
Chipotle & Starbucks
Medway Commons
67C Main Street
Medway,
Massachusetts

Charter Realty & Development Corp.

MARK	DATE	DESCRIPTION
2	2/24/2023	REVISE PER REVIEW COMMENTS
1	1/31/2023	REVISE PER LEASE PLAN

PROJECT NO:	C1026-023
DATE:	DECEMBER 22, 2022
FILE:	C1026-018_DSGN.DWG
DRAWN BY:	JRW
CHECKED:	JPL
APPROVED:	

SITE PLAN

SCALE: AS SHOWN

C-102

Last Saved: 2/23/2023
Plotted On:Feb 23, 2023-2:06pm By: JWinston
Tighe & Bond:J:\C\C1026 Charter Realty - Conceptual Sites\C1026-023 Medway Commons Starbucks\Drawings\AutoCAD\Sheet\C1026-018_DSGN.dwg

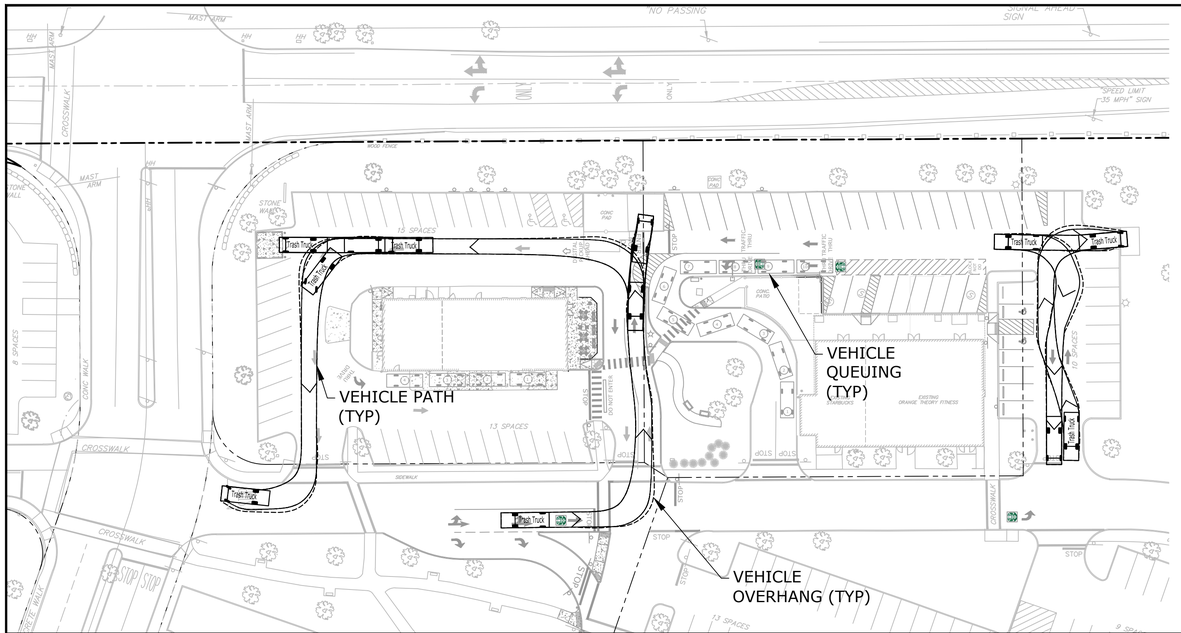

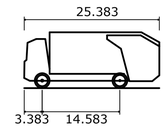

Trash Truck	
Overall Length	25.383ft
Overall Width	7.975ft
Overall Body Height	10.476ft
Min Body Ground Clearance	1.306ft
Track Width	7.975ft
Lock-to-lock time	6.00s
Curb to Curb Turning Radius	23.950ft

TRASH TRUCK CIRCULATION

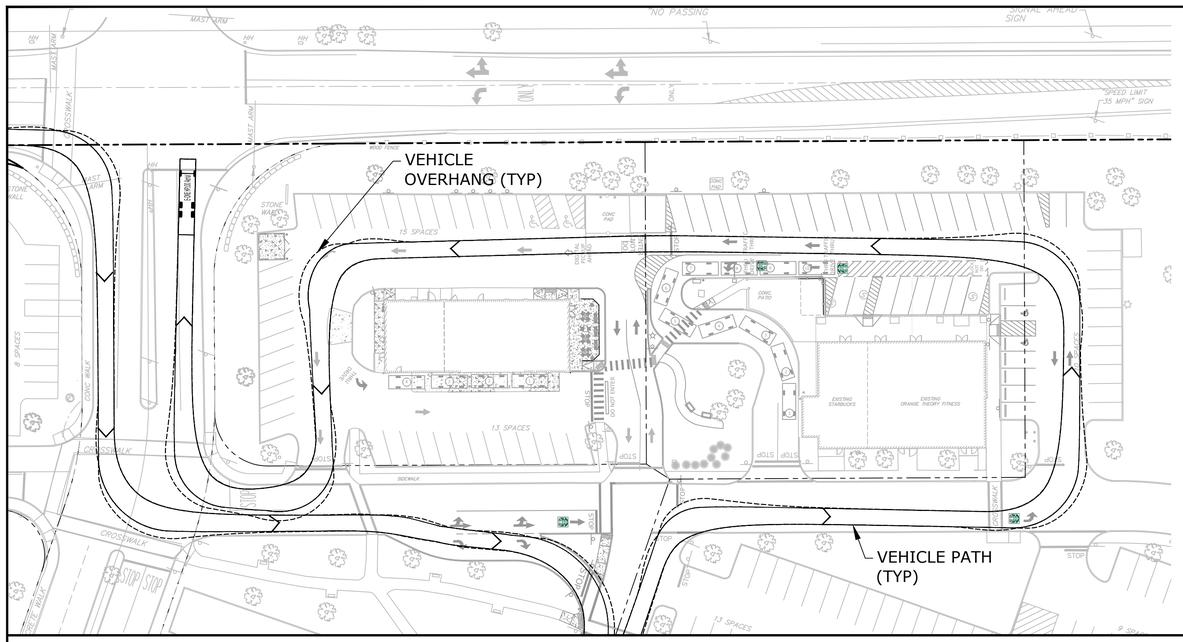

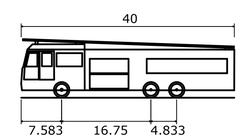

E-ONE HP100 Aerial	
Overall Length	40.000ft
Overall Width	8.333ft
Overall Body Height	11.000ft
Min Body Ground Clearance	1.393ft
Track Width	8.333ft
Lock-to-lock time	6.00s
Max Wheel Angle	45.00°

FIRE TRUCK CIRCULATION

0 40' 80'
GRAPHIC SCALE

Tighe&Bond

PERMIT PLANS - NOT FOR CONSTRUCTION

MINOR SITE PLAN FOR
Chipotle & Starbucks
Medway Commons
67C Main Street
Medway,
Massachusetts

Charter Realty &
Development Corp.

MARK	DATE	DESCRIPTION
2	2/24/2023	REVISE PER REVIEW COMMENTS
1	1/31/2023	REVISE PER LEASE PLAN

PROJECT NO:	C1026-023
DATE:	DECEMBER 22, 2022
FILE:	C1026-018-CIRCULATION EXHIBITS.DWG
DRAWN BY:	JRW
CHECKED:	JPL
APPROVED:	BLM

CIRCULATION PLAN

SCALE: AS SHOWN

C-105

Last Saved: 2/23/2023
Plotted On:Feb 23, 2023-11:40am By: JWinston
Tighe & Bond:J:\C\C1026 Charter Realty - Conceptual Sites\C1026-023 Medway Commons Starbucks\Drawings\AutoCAD\Sheet\C1026-018-CIRCULATION EXHIBITS.dwg

GENERAL PROJECT INFORMATION

PROJECT NAME: MEDWAY COMMONS
PROJECT ADDRESS: 67C MAIN STREET
MEDWAY, MASSACHUSETTS
PROJECT MAP / LOT: MAP 41 / LOT 23
PROJECT LATITUDE: 42.15682 N
PROJECT LONGITUDE: -71.405030 W

PROJECT DESCRIPTION

THE PROJECT CONSISTS OF SITE IMPROVEMENTS AT THE EXISTING STARBUCKS FOR IMPROVED TRAFFIC FLOW AS WELL AS NEW TENANTS IN THE EXISTING MCDONALDS BUILDING. MINOR SITE IMPROVEMENTS INCLUDE RECONFIGURING PARKING, UTILITY IMPROVEMENTS, REVISE CIRCULATION AND IMPROVED LANDSCAPING.

DISTURBED AREA

THE TOTAL AREA TO BE DISTURBED IS APPROXIMATELY 0.25 ACRES.

EROSION CONTROL NOTES:

1. ALL EROSION CONTROL MEASURES AND PRACTICES SHALL CONFORM TO THE MOST CURRENT MASSACHUSETTS STORMWATER STANDARDS PREPARED BY THE MADEP.
2. PRIOR TO ANY WORK OR SOIL DISTURBANCE, CONTRACTOR SHALL SUBMIT SHOP DRAWINGS FOR EROSION CONTROL MEASURES AS REQUIRED IN THE PROJECT MANUAL.
3. CONTRACTOR SHALL INSTALL TEMPORARY EROSION CONTROL BARRIERS, INCLUDING HAY BALES, SILT FENCES, MULCH BERMS, SILT SACKS AND SILT SOCKS AS SHOWN IN THESE DRAWINGS AS THE FIRST ORDER OF WORK.
4. SILT SACK INLET PROTECTION SHALL BE INSTALLED IN ALL EXISTING AND PROPOSED CATCH BASIN INLETS WITHIN THE WORK LIMITS AND BE MAINTAINED FOR THE DURATION OF THE PROJECT.
5. PERIMETER CONTROLS INCLUDING SILT FENCES, MULCH BERM, SILT SOCK, AND/OR HAY BALE BARRIERS SHALL BE MAINTAINED FOR THE DURATION OF THE PROJECT UNTIL NON-PAVED AREAS HAVE BEEN STABILIZED.
6. THE CONTRACTOR SHALL REMOVE AND PROPERLY DISPOSE OF ALL TEMPORARY EROSION CONTROL DEVICES UPON COMPLETION OF CONSTRUCTION.
7. ALL DISTURBED AREAS NOT OTHERWISE BEING TREATED SHALL RECEIVE 6" LOAM, SEED AND FERTILIZER.
8. INSPECT ALL INLET PROTECTION AND PERIMETER CONTROLS WEEKLY AND AFTER EACH RAIN STORM OF 0.25 INCH OR GREATER. REPAIR/MODIFY PROTECTION AS NECESSARY TO MAXIMIZE EFFICIENCY OF FILTER. REPLACE ALL FILTERS WHEN SEDIMENT IS 1/3 THE FILTER HEIGHT.

STABILIZATION:

1. AN AREA SHALL BE CONSIDERED STABLE WHEN ONE OF THE FOLLOWING HAS OCCURRED:
   A. BASE COURSE GRAVELS HAVE BEEN INSTALLED IN AREAS TO BE PAVED;
   B. A MINIMUM OF 85% VEGETATED GROWTH HAS BEEN ESTABLISHED;
   C. A MINIMUM OF 3" OF NON-EROSIVE MATERIAL SUCH AS STONE OR RIPRAP HAS BEEN INSTALLED;
   D. EROSION CONTROL BLANKETS HAVE BEEN PROPERLY INSTALLED.;
   E. IN AREAS TO BE PAVED, "STABLE" MEANS THAT BASE COURSE GRAVELS MEETING THE REQUIREMENTS OF MASSDOT STANDARD FOR ROAD AND BRIDGE CONSTRUCTION, 2016, HAVE BEEN INSTALLED.
2. WINTER STABILIZATION PRACTICES:
   A. ALL PROPOSED VEGETATED AREAS THAT DO NOT EXHIBIT A MINIMUM OF 85 PERCENT VEGETATIVE GROWTH BY OCTOBER 15, OR WHICH ARE DISTURBED AFTER OCTOBER 15, SHALL BE STABILIZED BY SEEDING AND INSTALLING EROSION CONTROL BLANKETS ON SLOPES GREATER THAN 3:1, AND SEEDING AND PLACING 3 TO 4 TONS OF MULCH PER ACRE, SECURED WITH ANCHORED NETTING, ELSEWHERE. THE INSTALLATION OF EROSION CONTROL BLANKETS OR MULCH AND NETTING SHALL NOT OCCUR OVER ACCUMULATED SNOW OR ON FROZEN GROUND AND SHALL BE COMPLETED IN ADVANCE OF THAW OR SPRING MELT EVENTS;
   B. ALL DITCHES OR SWALES WHICH DO NOT EXHIBIT A MINIMUM OF 85 PERCENT VEGETATIVE GROWTH BY OCTOBER 15, OR WHICH ARE DISTURBED AFTER OCTOBER 15, SHALL BE STABILIZED TEMPORARILY WITH STONE OR EROSION CONTROL BLANKETS APPROPRIATE FOR THE DESIGN FLOW CONDITIONS;
   C. AFTER OCTOBER 15, INCOMPLETE ROAD OR PARKING SURFACES, WHERE WORK HAS STOPPED FOR THE WINTER SEASON, SHALL BE PROTECTED WITH A MINIMUM OF 3 INCHES OF CRUSHED GRAVEL PER MASSDOT, OR IF CONSTRUCTION IS TO CONTINUE THROUGH THE WINTER SEASON BE CLEARED OF ANY ACCUMULATED SNOW AFTER EACH STORM EVENT;
3. STABILIZATION SHALL BE INITIATED ON ALL LOAM STOCKPILES, AND DISTURBED AREAS, WHERE CONSTRUCTION ACTIVITY SHALL NOT OCCUR FOR MORE THAN TWENTY-ONE (21) CALENDAR DAYS BY THE FOURTEENTH (14TH) DAY AFTER CONSTRUCTION ACTIVITY HAS PERMANENTLY OR TEMPORARILY CEASED IN THAT AREA. STABILIZATION MEASURES TO BE USED INCLUDE:
   A. TEMPORARY SEEDING;
   B. MULCHING.
4. ALL AREAS SHALL BE STABILIZED WITHIN 45 DAYS OF INITIAL DISTURBANCE.
5. WHEN CONSTRUCTION ACTIVITY PERMANENTLY OR TEMPORARILY CEASES WITHIN 100 FEET OF NEARBY SURFACE WATERS OR DELINEATED WETLANDS, THE AREA SHALL BE STABILIZED WITHIN SEVEN (7) DAYS OR PRIOR TO A RAIN EVENT. ONCE CONSTRUCTION ACTIVITY CEASES PERMANENTLY IN AN THESE AREAS, SILT FENCES, MULCH BERMS, HAY BALE BARRIERS AND ANY EARTH/DIKES SHALL BE REMOVED ONCE PERMANENT MEASURES ARE ESTABLISHED.
6. DURING CONSTRUCTION, RUNOFF WILL BE DIVERTED AROUND THE SITE WITH EARTH DIKES, PIPING OR STABILIZED CHANNELS WHERE POSSIBLE. SHEET RUNOFF FROM THE SITE WILL BE FILTERED THROUGH SILT FENCES, MULCH BERMS, HAY BALE BARRIERS, OR SILT SOCKS. ALL STORM DRAIN BASIN INLETS SHALL BE PROVIDED WITH FLARED END SECTIONS AND TRASH RACKS. THE SITE SHALL BE STABILIZED FOR THE WINTER BY OCTOBER 15.

DUST CONTROL:

1. THE CONTRACTOR SHALL BE RESPONSIBLE TO CONTROL DUST THROUGHOUT THE CONSTRUCTION PERIOD.
2. DUST CONTROL METHODS SHALL INCLUDE, BUT BE NOT LIMITED TO SPRINKLING WATER ON EXPOSED AREAS, COVERING LOADED DUMP TRUCKS LEAVING THE SITE, AND TEMPORARY MULCHING.
3. DUST CONTROL MEASURES SHALL BE UTILIZED SO AS TO PREVENT THE MIGRATION OF DUST FROM THE SITE TO ABUTTING AREAS.

STOCKPILES:

1. LOCATE STOCKPILES A MINIMUM OF 50 FEET AWAY FROM CATCH BASINS, SWALES, AND CULVERTS.
2. ALL STOCKPILES SHOULD BE SURROUNDED WITH TEMPORARY EROSION CONTROL MEASURES PRIOR TO THE ONSET OF PRECIPITATION.
3. PERIMETER BARRIERS SHOULD BE MAINTAINED AT ALL TIMES, AND ADJUSTED AS NEEDED TO ACCOMMODATE THE DELIVERY AND REMOVAL OF MATERIALS FROM THE STOCKPILE. THE INTEGRITY OF THE BARRIER SHOULD BE INSPECTED AT THE END OF EACH WORKING DAY.
4. PROTECT ALL STOCKPILES FROM STORMWATER RUN-OFF USING TEMPORARY EROSION CONTROL MEASURES SUCH AS BERMS, SILT SOCK, OR OTHER APPROVED PRACTICE TO PREVENT MIGRATION OF MATERIAL BEYOND THE IMMEDIATE CONFINES OF THE STOCKPILES.

VEGETATION:

1. TEMPORARY GRASS COVER:
   A. SEEDBED PREPARATION:
      a. APPLY FERTILIZER AT THE RATE OF 600 POUNDS PER ACRE OF 10-10-10. APPLY LIMESTONE (EQUIVALENT TO 50 PERCENT CALCIUM PLUS MAGNESIUM OXIDE) AT A RATE OF THREE (3) TONS PER ACRE;
   B. SEEDING:
      a. UTILIZE ANNUAL RYE GRASS AT A RATE OF 40 LBS/ACRE;
      b. WHERE THE SOIL HAS BEEN COMPACTED BY CONSTRUCTION OPERATIONS, LOOSEN SOIL TO A DEPTH OF TWO (2) INCHES BEFORE APPLYING FERTILIZER, LIME AND SEED;
      c. APPLY SEED UNIFORMLY BY HAND, CYCLONE SEEDER, OR HYDROSEEDER (SLURRY INCLUDING SEED AND FERTILIZER). HYDROSEEDINGS, WHICH INCLUDE MULCH, MAY BE LEFT ON SOIL SURFACE. SEEDING RATES MUST BE INCREASED 10% WHEN HYDROSEEDING;
   C. MAINTENANCE:
      a. TEMPORARY SEEDING SHALL BE PERIODICALLY INSPECTED. AT A MINIMUM, 95% OF THE SOIL SURFACE SHOULD BE COVERED BY VEGETATION. IF ANY EVIDENCE OF EROSION OR SEDIMENTATION IS APPARENT, REPAIRS SHALL BE MADE AND OTHER TEMPORARY MEASURES USED IN THE INTERIM (MULCH, FILTER BARRIERS, CHECK DAMS, ETC.).
2. PERMANENT MEASURES AND PLANTINGS:
   A. LIMESTONE SHALL BE THOROUGHLY INCORPORATED INTO THE LOAM LAYER AT A RATE OF THREE (3) TONS PER ACRE IN ORDER TO PROVIDE A PH VALUE OF 5.5 TO 6.5;
   B. FERTILIZER SHALL BE SPREAD ON THE TOP LAYER OF LOAM AND WORKED INTO THE SURFACE. FERTILIZER APPLICATION RATE SHALL BE 800 POUNDS PER ACRE OF 10-20-20 FERTILIZER;
   C. SOIL CONDITIONERS AND FERTILIZER SHALL BE APPLIED AT THE RECOMMENDED RATES AND SHALL BE THOROUGHLY WORKED INTO THE LOAM. LOAM SHALL BE RAKED UNTIL THE SURFACE IS FINELY PULVERIZED, SMOOTH AND EVEN, AND THEN COMPACTED TO AN EVEN SURFACE CONFORMING TO THE REQUIRED LINES AND GRADES WITH APPROVED ROLLERS WEIGHING BETWEEN 4-1/2 POUNDS AND 5-1/2 POUNDS PER INCH OF WIDTH;
   D. SEED SHALL BE SOWN AT THE RATE SHOWN BELOW. SOWING SHALL BE DONE ON A CALM, DRY DAY, PREFERABLY BY MACHINE, BUT IF BY HAND, ONLY BY EXPERIENCED WORKMEN. IMMEDIATELY BEFORE SEEDING, THE SOIL SHALL BE LIGHTLY RAKED. ONE HALF THE SEED SHALL BE SOWN IN ONE DIRECTION AND THE OTHER HALF AT RIGHT ANGLES TO THE ORIGINAL DIRECTION. IT SHALL BE LIGHTLY RAKED INTO THE SOIL TO A DEPTH NOT OVER 1/4 INCH AND ROLLED WITH A HAND ROLLER WEIGHING NOT OVER 100 POUNDS PER LINEAR FOOT OF WIDTH;
   E. HAY MULCH SHALL BE APPLIED IMMEDIATELY AFTER SEEDING AS INDICATED ABOVE;
   F. THE SURFACE SHALL BE WATERED AND KEPT MOIST WITH A FINE SPRAY AS REQUIRED, WITHOUT WASHING AWAY THE SOIL, UNTIL THE GRASS IS WELL ESTABLISHED. ANY AREAS WHICH ARE NOT SATISFACTORILY COVERED WITH GRASS SHALL BE RESEEDED, AND ALL NOXIOUS WEEDS REMOVED;
   G. THE CONTRACTOR SHALL PROTECT AND MAINTAIN THE SEEDED AREAS UNTIL ACCEPTED;
   H. A GRASS SEED MIXTURE CONTAINING THE FOLLOWING SEED REQUIREMENTS SHALL BE APPLIED AT THE INDICATED RATE:

SEED MIX	APPLICATION RATE
CREEPING RED FESCUE	66 LBS/ACRE
KENTUCKY BLUE	36 LBS/ACRE
PERENNIAL RYE	6 LBS/ACRE
REDTOP	6 LBS/ACRE

   IN NO CASE SHALL THE WEED CONTENT EXCEED ONE (1) PERCENT BY WEIGHT. ALL SEED SHALL COMPLY WITH STATE AND FEDERAL SEED LAWS. SEEDING SHALL BE DONE NO LATER THAN SEPTEMBER 15. IN NO CASE SHALL SEEDING TAKE PLACE OVER SNOW.
3. DORMANT SEEDING (SEPTEMBER 15 TO FIRST SNOWFALL):
   A. FOLLOW PERMANENT MEASURES SLOPE, LIME, FERTILIZER AND GRADING REQUIREMENTS. APPLY SEED MIXTURE AT TWICE THE INDICATED RATE. APPLY MULCH AS INDICATED FOR PERMANENT MEASURES.

WASTE DISPOSAL:

1. WASTE MATERIAL:
   A. ALL WASTE MATERIALS SHALL BE COLLECTED AND STORED IN SECURELY LIDDED RECEPTACLES. ALL TRASH AND CONSTRUCTION DEBRIS FROM THE SITE SHALL BE DEPOSITED IN A DUMPSTER;
   B. NO CONSTRUCTION WASTE MATERIALS SHALL BE BURIED ON SITE;
   C. ALL PERSONNEL SHALL BE INSTRUCTED REGARDING THE CORRECT PROCEDURE FOR WASTE DISPOSAL BY THE SUPERINTENDENT.
2. HAZARDOUS WASTE:
   A. ALL HAZARDOUS WASTE MATERIALS SHALL BE DISPOSED OF IN THE MANNER SPECIFIED BY LOCAL OR STATE REGULATION OR BY THE MANUFACTURER;
   B. SITE PERSONNEL SHALL BE INSTRUCTED IN THESE PRACTICES BY THE SUPERINTENDENT.
3. SANITARY WASTE:
   A. ALL SANITARY WASTE SHALL BE COLLECTED FROM THE PORTABLE UNITS A MINIMUM OF ONCE PER WEEK BY A LICENSED SANITARY WASTE MANAGEMENT CONTRACTOR.

SPILL PREVENTION:

1. CONTRACTOR SHALL BE FAMILIAR WITH SPILL PREVENTION MEASURES REQUIRED BY LOCAL, STATE AND FEDERAL AGENCIES. AT A MINIMUM, CONTRACTOR SHALL FOLLOW THE BEST MANAGEMENT SPILL PREVENTION PRACTICES OUTLINED BELOW.
2. THE FOLLOWING ARE THE MATERIAL MANAGEMENT PRACTICES THAT SHALL BE USED TO REDUCE THE RISK OF SPILLS OR OTHER ACCIDENTAL EXPOSURE OF MATERIALS AND SUBSTANCES DURING CONSTRUCTION TO STORMWATER RUNOFF:
   A. GOOD HOUSEKEEPING - THE FOLLOWING GOOD HOUSEKEEPING PRACTICE SHALL BE FOLLOWED ON SITE DURING CONSTRUCTION:
      a. ONLY SUFFICIENT AMOUNTS OF PRODUCTS TO DO THE JOB SHALL BE STORED ON SITE;
      b. ALL REGULATED MATERIALS STORED ON SITE SHALL BE STORED IN A NEAT, ORDERLY MANNER IN THEIR PROPER (ORIGINAL IF POSSIBLE) CONTAINERS AND, IF POSSIBLE, UNDER A ROOF OR OTHER ENCLOSURE, ON AN IMPERVIOUS SURFACE;
      c. MANUFACTURER'S RECOMMENDATIONS FOR PROPER USE AND DISPOSAL SHALL BE FOLLOWED;
      d. THE SITE SUPERINTENDENT SHALL INSPECT DAILY TO ENSURE PROPER USE AND DISPOSAL OF MATERIALS;
      e. SUBSTANCES SHALL NOT BE MIXED WITH ONE ANOTHER UNLESS RECOMMENDED BY THE MANUFACTURER;
      f. WHENEVER POSSIBLE ALL OF A PRODUCT SHALL BE USED UP BEFORE DISPOSING OF THE CONTAINER.
      g. THE TRAINING OF ON-SITE EMPLOYEES AND THE ON-SITE POSTING OF RELEASE RESPONSE INFORMATION DESCRIBING WHAT TO DO IN THE EVENT OF A SPILL OF REGULATED SUBSTANCES.
   B. HAZARDOUS PRODUCTS - THE FOLLOWING PRACTICES SHALL BE USED TO REDUCE THE RISKS ASSOCIATED WITH HAZARDOUS MATERIALS:
      a. PRODUCTS SHALL BE KEPT IN THEIR ORIGINAL CONTAINERS UNLESS THEY ARE NOT RESEALABLE;
      b. ORIGINAL LABELS AND MATERIAL SAFETY DATA SHALL BE RETAINED FOR IMPORTANT PRODUCT INFORMATION;
      c. SURPLUS PRODUCT THAT MUST BE DISPOSED OF SHALL BE DISCARDED ACCORDING TO THE MANUFACTURER'S RECOMMENDED METHODS OF DISPOSAL.
   C. PRODUCT SPECIFIC PRACTICES - THE FOLLOWING PRODUCT SPECIFIC PRACTICES SHALL BE FOLLOWED ON SITE:
      a. PETROLEUM PRODUCTS:
      - ALL ON SITE VEHICLES SHALL BE MONITORED FOR LEAKS AND RECEIVE REGULAR PREVENTIVE MAINTENANCE TO REDUCE LEAKAGE;
      - PETROLEUM PRODUCTS SHALL BE STORED IN TIGHTLY SEALED CONTAINERS WHICH ARE CLEARLY LABELED. ANY ASPHALT BASED SUBSTANCES USED ON SITE SHALL BE APPLIED ACCORDING TO THE MANUFACTURER'S RECOMMENDATIONS.
      b. FERTILIZERS:
      - FERTILIZERS USED SHALL BE APPLIED ONLY IN THE MINIMUM AMOUNTS DIRECTED BY THE SPECIFICATIONS;
      - ONCE APPLIED FERTILIZERS SHALL BE WORKED INTO THE SOIL TO LIMIT EXPOSURE TO STORMWATER;
      - STORAGE SHALL BE IN A COVERED SHED OR ENCLOSED TRAILERS. THE CONTENTS OF ANY PARTIALLY USED BAGS OF FERTILIZER SHALL BE TRANSFERRED TO A SEALABLE PLASTIC BIN TO AVOID SPILLS
      c. PAINTS:
      - ALL CONTAINERS SHALL BE TIGHTLY SEALED AND STORED WHEN NOT REQUIRED FOR USE;
      - EXCESS PAINT SHALL NOT BE DISCHARGED TO THE STORM SEWER SYSTEM;
      - EXCESS PAINT SHALL BE DISPOSED OF PROPERLY ACCORDING TO MANUFACTURER'S INSTRUCTIONS OR STATE AND LOCAL REGULATIONS.
   D. SPILL CONTROL PRACTICES - IN ADDITION TO GOOD HOUSEKEEPING AND MATERIAL MANAGEMENT PRACTICES DISCUSSED IN THE PREVIOUS SECTION, THE FOLLOWING PRACTICES SHALL BE FOLLOWED FOR SPILL PREVENTION AND CLEANUP:
      a. MANUFACTURER'S RECOMMENDED METHODS FOR SPILL CLEANUP SHALL BE CLEARLY POSTED AND SITE PERSONNEL SHALL BE MADE AWARE OF THE PROCEDURES AND THE LOCATION OF THE INFORMATION AND CLEANUP SUPPLIES;
      b. MATERIALS AND EQUIPMENT NECESSARY FOR SPILL CLEANUP SHALL BE KEPT IN THE MATERIAL STORAGE AREA ON SITE. EQUIPMENT AND MATERIALS SHALL INCLUDE BUT NOT BE LIMITED TO BROOMS, DUSTPANS, MOPS, RAGS, GLOVES, GOGGLES, KITTY LITTER, SAND, SAWDUST AND PLASTIC OR METAL TRASH CONTAINERS SPECIFICALLY FOR THIS PURPOSE;
      c. ALL SPILLS SHALL BE CLEANED UP IMMEDIATELY AFTER DISCOVERY;
      d. THE SPILL AREA SHALL BE KEPT WELL VENTILATED AND PERSONNEL SHALL WEAR APPROPRIATE PROTECTIVE CLOTHING TO PREVENT INJURY FROM CONTACT WITH A HAZARDOUS SUBSTANCE;
      e. SPILLS OF TOXIC OR HAZARDOUS MATERIAL SHALL BE REPORTED TO THE APPROPRIATE LOCAL, STATE OR FEDERAL AGENCIES AS REQUIRED;
      f. THE SITE SUPERINTENDENT RESPONSIBLE FOR DAY-TO-DAY SITE OPERATIONS SHALL BE THE SPILL PREVENTION AND CLEANUP COORDINATOR.
   E. VEHICLE FUELING AND MAINTENANCE PRACTICE:
      a. CONTRACTOR SHALL MAKE AN EFFORT TO PERFORM EQUIPMENT/VEHICLE FUELING AND MAINTENANCE AT AN OFF-SITE FACILITY;
      b. CONTRACTOR SHALL PROVIDE AN ON-SITE FUELING AND MAINTENANCE AREA THAT IS CLEAN AND DRY;
      c. IF POSSIBLE THE CONTRACTOR SHALL KEEP AREA COVERED;
      d. CONTRACTOR SHALL KEEP A SPILL KIT AT THE FUELING AND MAINTENANCE AREA;
      e. CONTRACTOR SHALL REGULARLY INSPECT VEHICLES FOR LEAKS AND DAMAGE;
      f. CONTRACTOR SHALL USE DRIP PANS, DRIP CLOTHS, OR ABSORBENT PADS WHEN REPLACING SPENT FLUID.

EROSION CONTROL OBSERVATIONS AND MAINTENANCE PRACTICES

THIS PROJECT DOES NOT EXCEED ONE (1) ACRE OF DISTURBANCE AND THEREFORE DOES NOT REQUIRES A SWPPP.

WT.	A	B	C
3 LBS	1 5/8" OR 1 7/8"	1 5/8" OR 1 7/8"	3 1/2"
4 LBS	1 3/8"	1 3/4"	3 1/2"

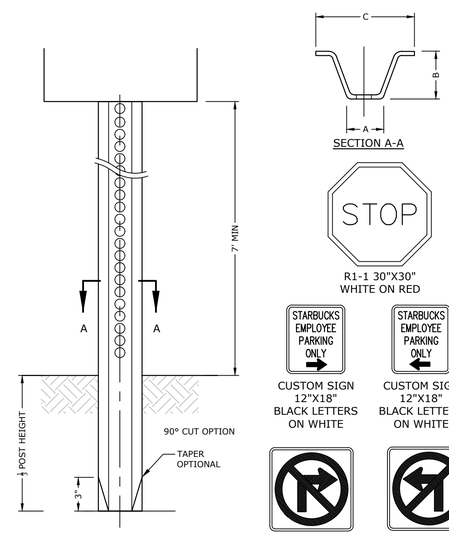

NOTES:

1. STEEL FOR POSTS SHALL CONFORM TO THE MECHANICAL REQUIREMENTS OF ASTM A 499-81 GRADE 60 AND TO THE CHEMICAL REQUIREMENTS OF ASTM A1-76 CARBON STEEL TEE RAIL HAVING NOMINAL WEIGHT OF 91 LBS. OR GREATER PER LINEAR YARD.
2. AFTER FABRICATION, ALL STEEL POSTS SHALL BE GALVANIZED TO MEET THE REQUIREMENTS OF ASTM A 123.
3. ALL SIGN POSTS SHALL HAVE "BREAKAWAY" FEATURES THAT MEET AASHTO REQUIREMENTS CONTAINED IN "STANDARD SPECIFICATIONS FOR STRUCTURAL SUPPORTS FOR HIGHWAY SIGNS, LUMINAIRES AND TRAFFIC SIGNALS-1985." THE "BREAKAWAY" FEATURES SHALL BE STRUCTURALLY ADEQUATE TO CARRY THE SIGNS SHOWN IN THE PLANS AT 60 MPH WIND LOADINGS. INSTALLATIONS SHALL BE IN ACCORDANCE WITH MANUFACTURERS RECOMMENDATIONS.
4. TYPE A POSTS - 3 LB/FT TYPE B POSTS - 4 LB/FT.
5. ALL SIGNS TO BE CONSTRUCTED PER THE LATEST EDITION OF THE FHWA STANDARD HIGHWAY SIGNS MANUAL AND INSTALLED AS INDICATED IN THE MANUAL ON UNIFORM TRAFFIC CONTROL DEVICES, LATEST EDITION.
6. MEET REQUIREMENTS OF COMMONWEALTH OF MASSACHUSETTS DEPARTMENT OF TRANSPORTATION STANDARD SPECIFICATIONS FOR HIGHWAY AND BRIDGES, LATEST EDITION.

* IN LEDGE DRILL & GROUT TO A MIN OF 2'

LENGTH: AS REQUIRED
WEIGHT PER LINEAR FOOT: 2.50 LBS (MIN.)
HOLES: 3/8" DIAMETER, 1" C-C FULL LENGTH
STEEL: SHALL CONFORM TO ASTM A-499 (GRADE 60) OR ASSTM A-576 (GRADE 1070 - 1080)
FINISH: SHALL BE GALVANIZED IN ACCORDANCE WITH AASHTO M111.

STOP SIGN & POST
NO SCALE

APPROVED BY: TOWN OF MEDWAY PLANNING AND ECONOMIC DEVELOPMENT BOARD
APPROVAL DATE:
ENDORSEMENT DATE:

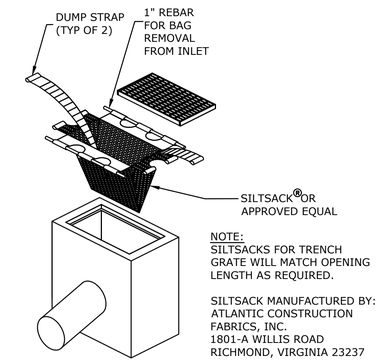

NOTE:
SILTSACKS FOR TRENCH GRATE WILL MATCH OPENING LENGTH AS REQUIRED.

SILTSACK MANUFACTURED BY:
ATLANTIC CONSTRUCTION FABRICS, INC.
1801-A WILLIS ROAD
RICHMOND, VIRGINIA 23237

SILTSACK® EROSION CONTROL
NO SCALE

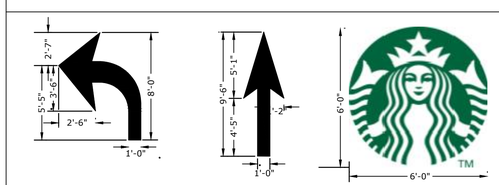

TURN ARROW
(RIGHT TURN OPPOSITE IN KIND)

THROUGH ARROW

STARBUCKS LOGO

DO NOT ENTER
DIRECTIONAL PAINT

DIGITAL PICKUP AHEAD
DIRECTIONAL PAINT

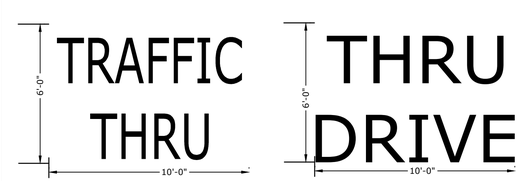

THRU TRAFFIC LEGEND

DRIVE THRU LEGEND

PAVEMENT MARKING NOTES:

1. ALL WORDS AND SYMBOLS SHALL BE RETROREFLECTIVE WHITE AND SHALL CONFORM TO THE LATEST VERSION OF THE MUTCD.
2. MULTI-WORD MESSAGES SHALL READ "UP"; THAT IS, THE FIRST WORD SHALL BE NEAREST THE APPROACHING DRIVER.
3. THE WORD "ONLY" SHALL NOT BE USED WITH THROUGH OR COMBINATION ARROWS, AND SHALL NOT BE USED ADJACENT TO A BROKEN LANE LINE. A WORD/SYMBOL SHALL PRECEED THE WORD "ONLY".
4. COMBINATION ARROWS MAY BE COMPRISED OF 2 SINGLE ARROWS (e.g. TURN AND THROUGH ARROWS). HOWEVER, THE SHAFTS OF THE ARROWS SHALL COINCIDE AS SHOWN.
5. PREFORMED WORDS AND SYMBOLS SHALL BE PRE-CUT BY THE MANUFACTURER.
6. CUSTOM PAINT MARKINGS AND LOGO SHALL BE COORDINATED WITH THE OWNER.

PAVEMENT MARKINGS
NO SCALE

Tighe&Bond

PERMIT PLANS - NOT FOR CONSTRUCTION

MINOR SITE PLAN FOR
Chipotle & Starbucks
Medway Commons
67C Main Street
Medway,
Massachusetts

Charter Realty & Development Corp.

MARK	DATE	DESCRIPTION
2	2/24/2023	REVISE PER REVIEW COMMENTS
1	1/31/2023	REVISE PER LEASE PLAN

PROJECT NO:	C1026-023
DATE:	DECEMBER 22, 2022
FILE:	C1026-018_DTLS.DWG
DRAWN BY:	
CHECKED:	
APPROVED:	

EROSION CONTROL NOTES & DETAILS

SCALE: AS SHOWN AS SHOWN

C-501

Last Saved: 2/23/2023
Plotted On:Feb 23, 2023-11:02am By: JWinston
Tighe & Bond:J:\C\C1026 Charter Realty - Conceptual Sites\C1026-023 Medway Commons Starbucks\Drawings\AutoCAD\Sheet\C1026-018_DTLS.dwg

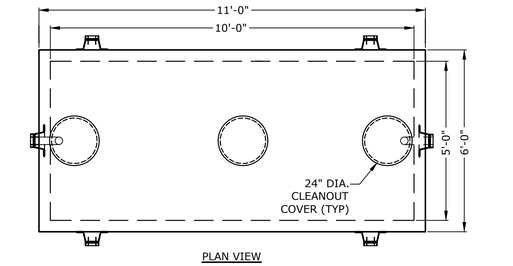

PLAN VIEW

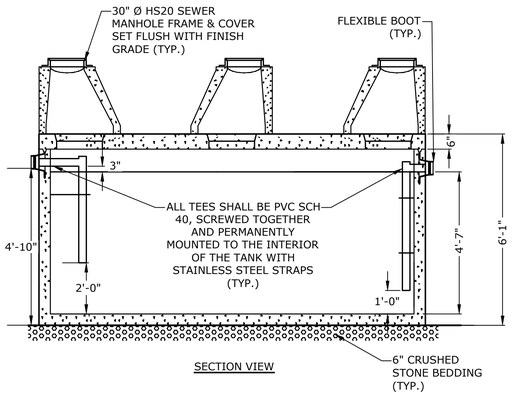

SECTION VIEW

1,500 GALLON GREASE INTERCEPTOR

NO SCALE

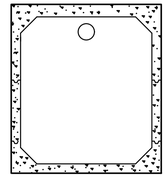

SECTION B-B

NOTES:
1. ALL COMPONENTS TO BE DESIGNED FOR AASHTO H-20 LOADING.
2. MANHOLE FRAME & COVERS SHALL BE OF HEAVY DUTY DEVICES.
3. FILL WITH WATER BEFORE REMOVAL OF DEWATERING DEVICES.
4. GREASE TRAP SHALL BE VENTED AS REQUIRED BY CODE.

FRAMES AND COVERS
(INCLUDING RAISED INSPECTION COVERS)
MANHOLE FRAME AND COVERS SHALL BE OF HEAVY DUTY DESIGN AND PROVIDE A 30" CLEAR OPENING. A 3" (MINIMUM HEIGHT) LETTER "S" FOR SEWERS SHALL BE PLAINLY CAST INTO THE CENTER OF EACH COVER. ADJUST COVER TO GRADE WITH BRICKS OR PRECAST CONCRETE RINGS - MAXIMUM 12" ADJUSTMENT. ALL COMPONENTS TO BE DESIGNED FOR HS-20 (AASHTO)

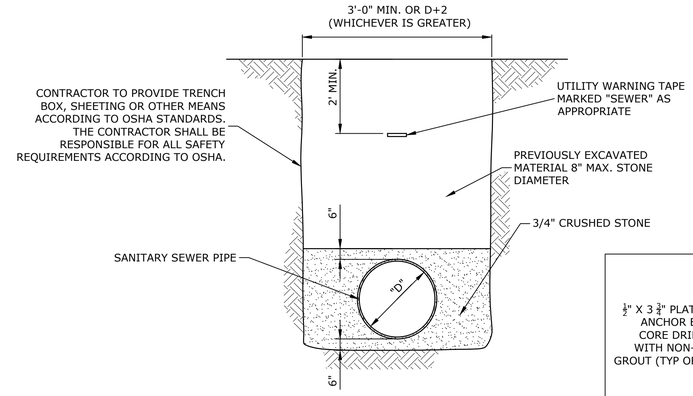

NOTES:
1. COMPACT ALL BACKFILL MATERIAL WITH VIBRATORY PLATE EQUIPMENT (MINIMUM TWO PASSES) TO A MINIMUM DENSITY OF 95 PERCENT OF THE STANDARD PROCTOR DENSITY AS DETERMINED BY ASTM D698.
2. PLACE BACKFILL MATERIAL IN MAXIMUM ONE FOOT LIFTS.

TYPICAL SEWER TRENCH SECTION

NO SCALE

APPROVED BY: TOWN OF MEDWAY PLANNING AND ECONOMIC DEVELOPMENT BOARD
APPROVAL DATE:
ENDORSEMENT DATE:

Tighe&Bond

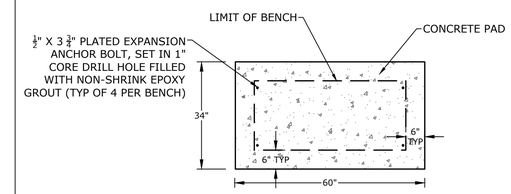

PLAN VIEW

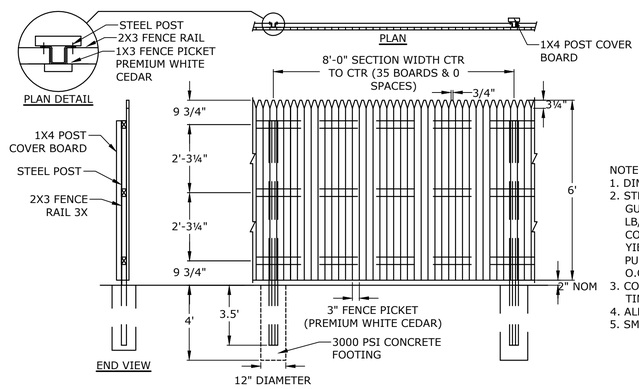

FENCE SECTION ELEVATION

NOTES:
1. DIMENSIONS SHOWN ARE NOMINAL FOR WOOD.
2. STEEL POSTS SHALL BE 3-1/2" X 1-3/4", 11 GUAGE GALVANIZED STEEL (WEIGHT = 2.64 LB/LF), ROLLED FORM STEEL SHAPES COMPLYING WITH ASTM A-653, 50,000 PSI YIELD STRENGTH AND G90 ZINC COATING. PUNCH THROUGH HOLES: 13/64" DIAMETER, 1" O.C. AT BOTH FLANGES.
3. CONSTRUCT FENCE FROM WHITE CEDAR TIMBERS - NO STAIN OR PAINT.
4. ALL POSTS IN A TRUE AND STRAIGHT LINE.
5. SMOOTH SIDE OF FENCE TO FACE OUTSIDE.

DUMPSTER ENCLOSURE

NO SCALE

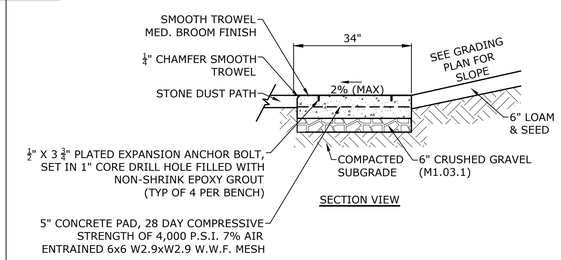

SECTION VIEW

NOTES:
1. CONCRETE TO BE 4500 PSI, 7% AIR ENTRAINED
2. STANDARD BROOM FINISH.

CONCRETE PAD FOR BENCHES

NO SCALE

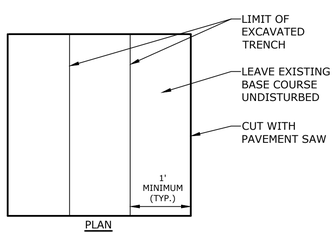

PLAN

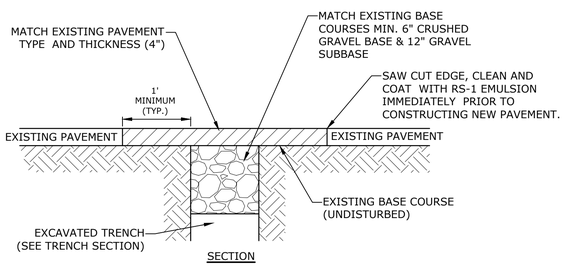

SECTION

TRENCH PATCH

NO SCALE

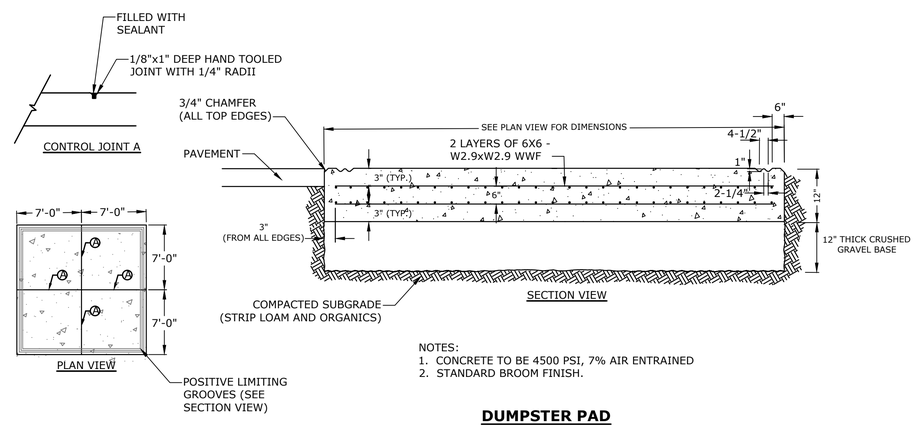

SECTION VIEW

PLAN VIEW

NOTES:
1. CONCRETE TO BE 4500 PSI, 7% AIR ENTRAINED
2. STANDARD BROOM FINISH.

DUMPSTER PAD

NO SCALE

NOTES:
1. BENCH IS PROTOTYPICAL.
2. BENCHES TO BE PLACED ON A CONCRETE PAD & BOLTED DOWN.
3. MATCH EXISTING BENCHES ON SITE TO EXTENT PRACTICAL.

TYPICAL COMMON BENCH

NO SCALE

PERMIT PLANS - NOT FOR CONSTRUCTION

MINOR SITE PLAN FOR
Chipotle & Starbucks
Medway Commons
67C Main Street
Medway,
Massachusetts

Charter Realty & Development Corp.

MARK	DATE	DESCRIPTION
2	2/24/2023	REVISE PER REVIEW COMMENTS
1	1/31/2023	REVISE PER LEASE PLAN

PROJECT NO:	C1026-023
DATE:	DECEMBER 22, 2022
FILE:	C1026-018_DTLS.DWG
DRAWN BY:	
CHECKED:	
APPROVED:	

DETAILS

SCALE: AS SHOWN AS SHOWN

C-504

Last Saved: 2/23/2023
Plotted On:Feb 23, 2023-1:03pm By: JWinston
Tighe & Bond: J:\C\C1026 Charter Realty - Conceptual Sites\C1026-023 Medway Commons Starbucks\Drawings\AutoCAD\Sheet\C1026-018_DTLS.dwg