Improvements to: Choate Park

Oak St. and Winthrop Street
Medway, Massachusetts

Assesor's Map/Lot: 39-074, 39-078,
Zoning District: Agricultural Residental II

Owner / Applicant:

Town Administrator's Office
Town of Medway
155 Village Street
Medway, MA 02053

Project Team:

CBA | Landscape Architects LLC
24 THORNDIKE STREET | CAMBRIDGE MA 02141
phone 617.945.9760 | www.cbaland.com | cba@cbaland.com
landscape architecture | urban design | master planning

samiotes

Samiotes Consultants Inc.
Civil Engineers + Land Surveyors

20 A Street
Framingham, MA 01701

T 508.877.6688
F 508.877.8349

www.samiotes.com

Web-CBA-Cad\Porta\Medway Parks\Cbaland Park\CAD\Grd\Parkmtbg_Cnt View Logo.jpg

30 River Street
Methuen, MA 01844

T 978.416.0203
W www.CivilVIEWInc.com

Locus Plan
Not to Scale

Site Plan Record Set
Revision 2 - Nov. 7, 2017

Prepared by CBA Landscape Architects LLC

Original Submission - Aug. 17, 2017
Revision 1 - Sept. 22, 2017

MASSACHUSETTS REGISTERED LANDSCAPE ARCHITECT NO. 1912

LIST OF APPROVED WAIVERS

(See Form Q Sheets in Site Plan Review Application Packet)

204-3 A.7.a - Request for limited Traffic Impact Assessment
204-3 A.7.b - Request to Substitute Notice of Intent for Environmental Impact Assessment
204-5 C.1 and .2 - Request for waiver of survey 100' past property line
204-5 C.3 and 204-5 D.7 - Request for inventory of trees 18"+ DBH in lieu of 10"+ / 12"+
205-6 G.3 - Request for Waiver of Wheel Stop Requirement.

DRAWING LIST

APPROVED BY MEDWAY PLANNING & ECONOMIC DEVELOPMENT BOARD

APPROVED BY:

APPROVAL DATE: October 10, 2017
ENDORSEMENT DATE: April 10, 2018

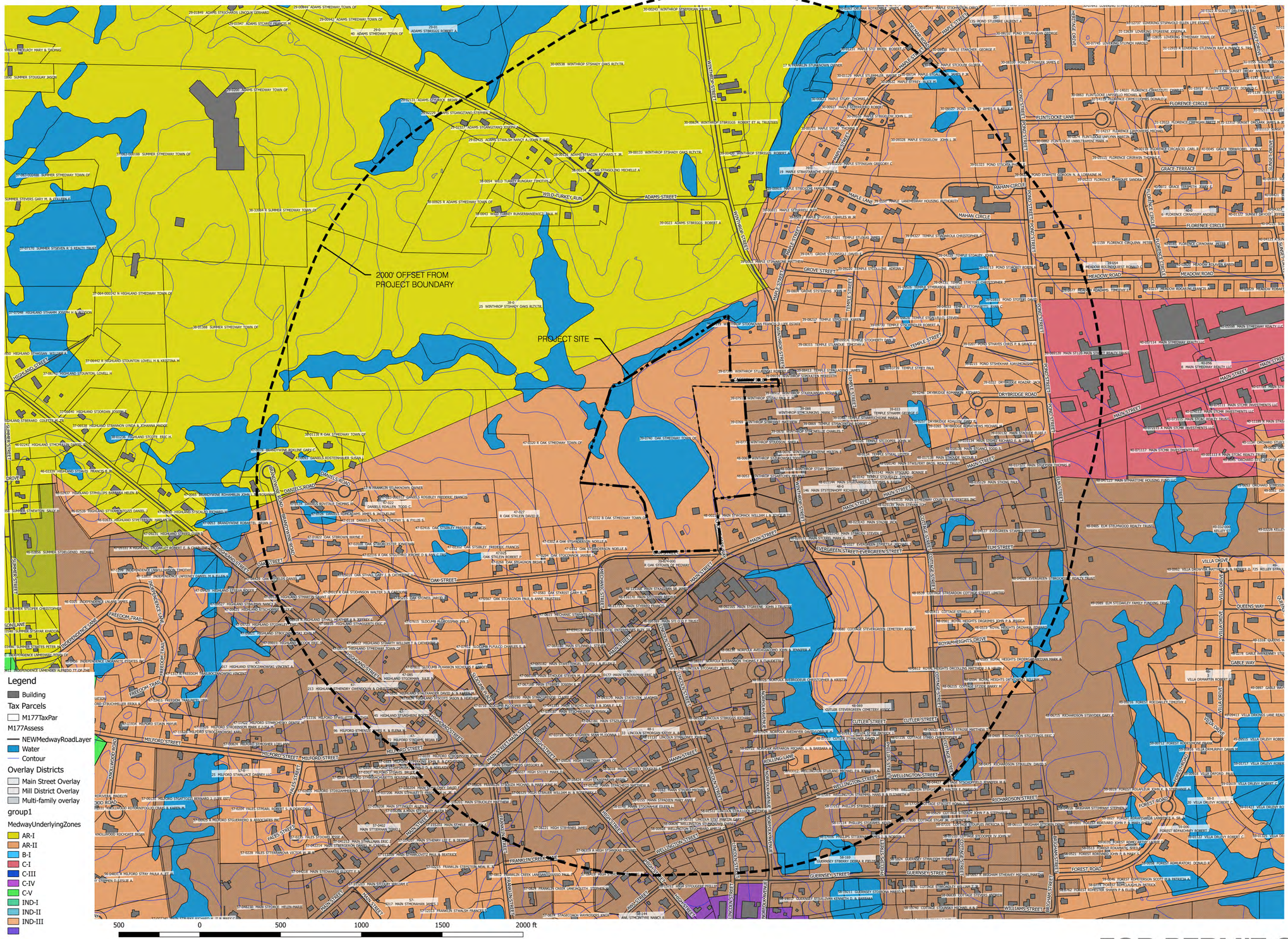

FOR PERMIT ONLY

CBA | Landscape Architects LLC
24 THORNDIKE STREET I CAMBRIDGE MA 02141
phone 617.945.9760 I www.cbaland.com I cba@cbaland.com
landscape architecture
urban design
master planning

Improvements to Choate Park

Site Plan Submission

Site Context Plan

REVISIONS:		
1	09-22-17	P.B. Comments
2	11-7-17	Record Set
DATE:	08/17/2017	
SCALE:	1" = 300'-0"	
FILE:	Choate-Context.dwg	
DWN BY:	AJK	
CKD BY:	DJC	
PROJ. # :	1612a	

L1.0

Improvments to Choate Park

Site Plan Submittal

Illustrative Plan

REVISIONS:

1	09-22-17	P.B. Comments
2	11-7-17	Record Set

DATE: 08/17/2017

SCALE: 1" = 50' - 0"

FILE: CHO-Illustrative.dwg

DWN BY: AJK

CKD BY: DJC

PROJ. #: 1612a

L2.0

CBA | Landscape Architects LLC

24 THORNDIKE STREET | CAMBRIDGE MA 02141

phone 617.945.9760 | www.cbaland.com | cba@cbaland.com

landscape architecture
urban design
master planning

LOCUS MAP

(SCALE: 1:1,000)

LEGEND

PROPERTY LINE	
ABUTTERS PROPERTY LINE	
EDGE OF PAVEMENT	
CURB	
EDGE OF GRAVEL	
CONTOUR	100
OVER HEAD WIRES	
UNDERGROUND DRAINAGE	
UNDERGROUND SEWER	
CHAIN LINK FENCE	
WOOD FENCE	
STEEL FENCE	
EDGE OF WATER	
TREE LINE	
RETAINING WALL	
STONE WALL	
DRAIN MANHOLE	
CATCH BASIN	
FLARED END STRUCTURE	
SEWER MANHOLE	
UTILITY POLE	
SITE LIGHTING	
IRRIGATION CONTROL BOX	
SIGN	
BOLLARD	
DECIDUOUS TREE	
CONIFEROUS TREE	
CONCRETE	
BRICK	
SAND	
BUILDING	
FEMA ZONE AE	
FEMA ZONE AE FLOODWAY	
FEMA ZONE X	

NOTES:

1. EXISTING CONDITIONS INFORMATION GENERATED FROM AN AERIAL SURVEY PERFORMED BY CIVILVIEW, INC. IN DECEMBER OF 2016.
2. PLAN BEARINGS ARE BASED UPON THE MASSACHUSETTS STATE PLANE COORDINATE SYSTEM (NAD83), MAINLAND ZONE PER GPS OBSERVATIONS.
3. ELEVATIONS ARE BASED UPON THE NORTH AMERICAN VERTICAL DATUM (NAVD88) PER GPS OBSERVATIONS.
4. SUBJECT PARCEL IS NOT LOCATED WITHIN A DESIGNATED FLOOD ZONE PER FEMA FLOOD INSURANCE RATE MAP 25021C0143E DATED JULY 17, 2012.
5. PROPERTY LINES ARE SHOWN BASED UPON A PLAN PREPARED BY CITTE & OWYER, INC. TITLED "PLAN OF LAND, CHOATE PARK, MAIN, OAK & WINTHROP STREETS, MEDWAY, MA 02053" DATED JANUARY 23, 2017.

DATE	DESCRIPTION
REVISIONS	

CLIENT:

CBA LANDSCAPE ARCHITECTS, LLC
24 THORNDIKE STREET
CAMBRIDGE, MA 02141

PROJECT:

CHOATE PARK
MEDWAY, MA 02053

DATE ISSUED:	JULY 12, 2017
PROJECT #:	16-09001
PREPARED BY:	AKG

COMMONWEALTH OF MASSACHUSETTS
ANDREW B. STREET
CIVIL
No. 48510

PROFESSIONAL ENGINEER FOR CIVILVIEW, INC.

CIVILVIEW
30 River Street
Waltham, MA 02454
Tel: (978) 474-0529
www.CIVILVIEWinc.com

DRAWING TITLE:

EXISTING CONDITIONS PLAN

DRAWING #:

EC-1

CBA | Landscape Architects LLC
24 THORNDIKE STREET | CAMBRIDGE MA 02141
phone 617.945.9760 | www.cbaland.com | cba@cbaland.com
landscape architecture
urban design
master planning

Improvements to Choate Park

Site Plan Submission

Existing Conditions Plan: Sheet 1

REVISIONS:

1	09-22-17	P.B. Comments
2	11-7-17	Record Set

DATE:	08/17/2017
SCALE:	1" = 60' - 0"
FILE:	Choate-EC.dwg
DWN BY:	Civil View
CKD BY:	DJC
PROJ. # :	1612a

L3.0

0 30 60 120 180 240'

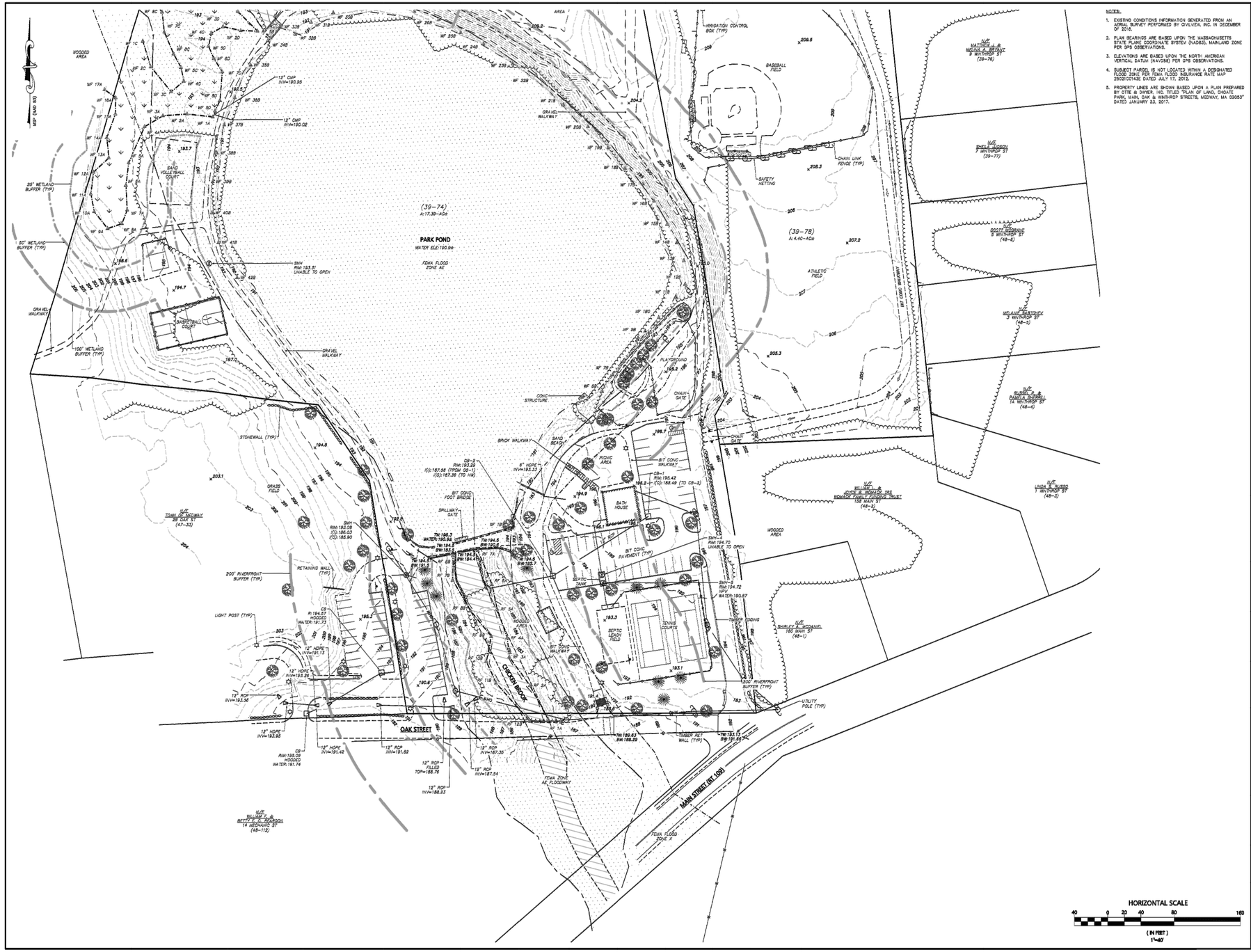

NOTES:

1. EXISTING CONDITIONS INFORMATION GENERATED FROM AN AERIAL SURVEY PERFORMED BY CIVILVIEW, INC. IN DECEMBER OF 2016.
2. PLAN BEARINGS ARE BASED UPON THE MASSACHUSETTS STATE PLANE COORDINATE SYSTEM (NAD83), MAINLAND ZONE PER GPS OBSERVATIONS.
3. ELEVATIONS ARE BASED UPON THE NORTH AMERICAN VERTICAL DATUM (NAVD88) PER GPS OBSERVATIONS.
4. SUBJECT PARCEL IS NOT LOCATED WITHIN A DESIGNATED FLOOD ZONE PER FEMA FLOOD INSURANCE RATE MAP 25021C0143E DATED JULY 17, 2012.
5. PROPERTY LINES ARE SHOWN BASED UPON A PLAN PREPARED BY OTTE & DWYER, INC. TITLED "PLAN OF LAND, CHOATE PARK, MAIN, OAK & WINTHROP STREETS, MEDWAY, MA 02053" DATED JANUARY 23, 2017.

DATE	DESCRIPTION
REVISIONS	

CLIENT:
CBA LANDSCAPE ARCHITECTS, LLC
24 THORNDIKE STREET
CAMBRIDGE, MA 02141

PROJECT:
CHOATE PARK
MEDWAY, MA 02053

DATE ISSUED:	JULY 12, 2017
PROJECT #:	16-09001
PREPARED BY:	AKG

COMMONWEALTH OF MASSACHUSETTS ANDREW K. STREET CIVIL No. 48510 REGISTERED PROFESSIONAL ENGINEER
7/12/17
PROFESSIONAL ENGINEER FOR CIVILVIEW, INC.

CIVILVIEW
30 River Street Milford, MA 01864 Tel: (978) 474-0200 www.CIVILVIEWinc.com

DRAWING TITLE:
EXISTING CONDITIONS PLAN

DRAWING #:
EC-2

0 30 60 120 180 240'

CBA | Landscape Architects LLC
24 THORNDIKE STREET | CAMBRIDGE MA 02141
phone 617.945.9760 | www.cbaland.com | cba@cbaland.com
landscape architecture
urban design
master planning

Improvements to Choate Park

Site Plan Submission

Existing Condition Plans: Sheet 2

REVISIONS:		
1	09-22-17	P.B. Comments
1	11-7-17	Record Set
DATE:	08/17/2017	
SCALE:	1" = 60' - 0"	
FILE:	Choate-EC.dwg	
DWN BY:	CIVIL VIEW	
CKD BY:	DJC	
PROJ. # :	1612a	

L3.1

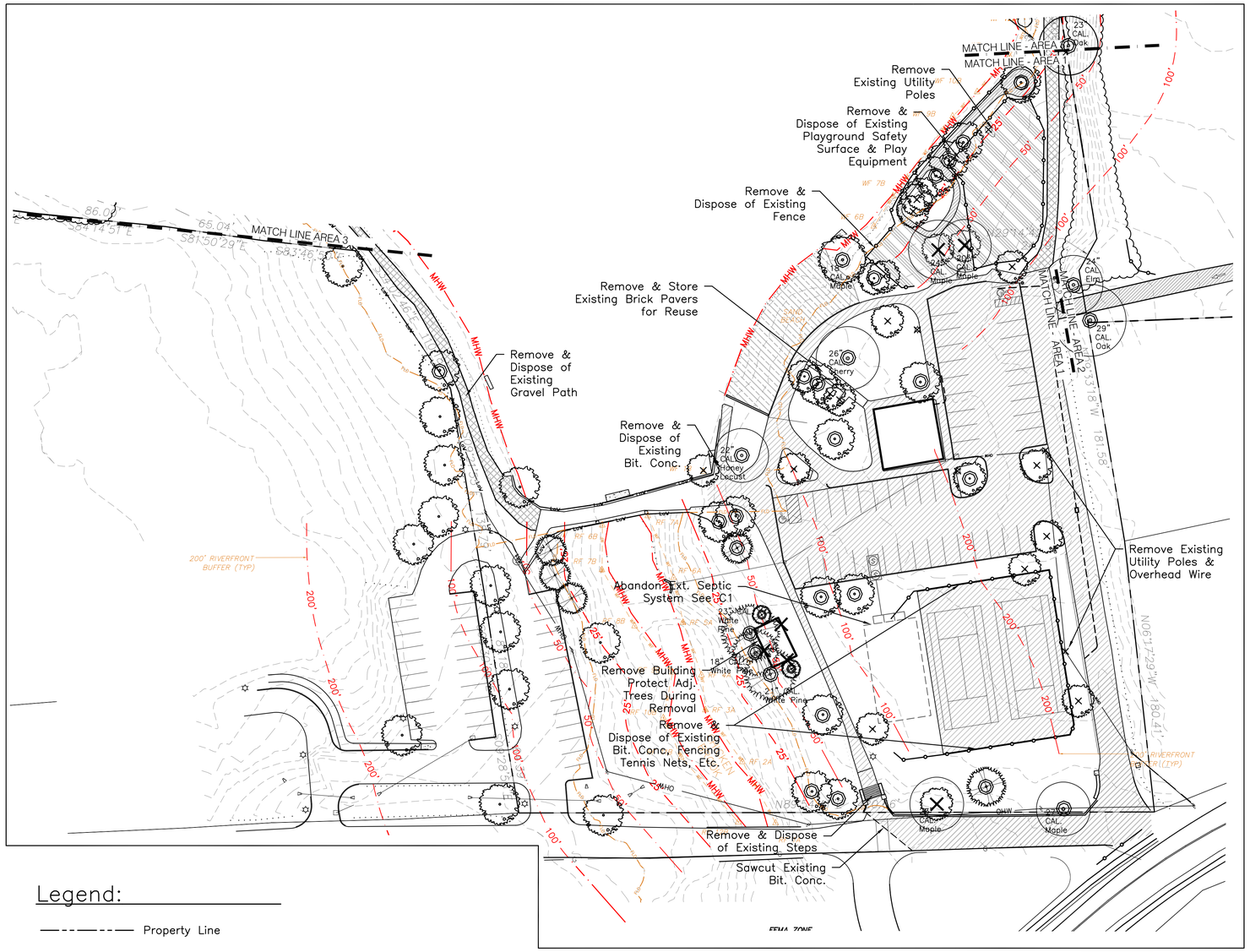

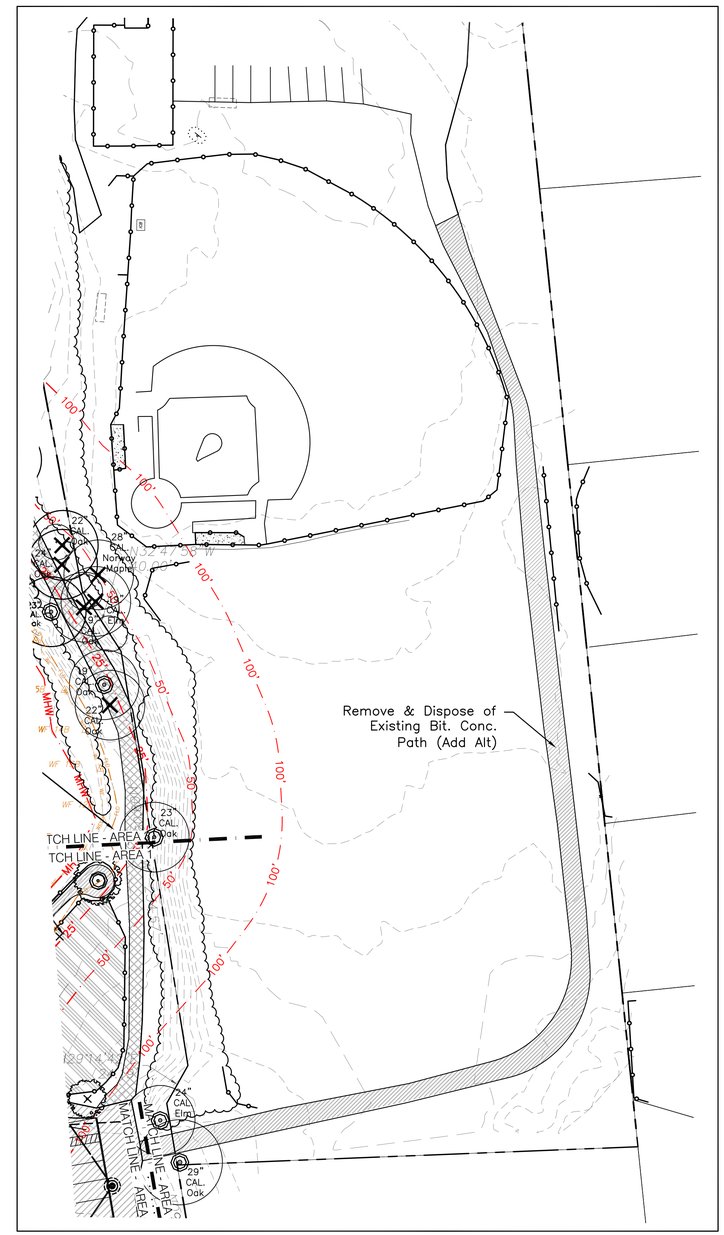

Legend:

- Property Line
- Edge of Water
- Forested Area
- Wetland Setback
- Erosion Control Sock
- Limit Of Work (w/o Erosion Controls)
- Stone Wall
- Large Caliper Tree to be Removed
- Large Caliper Tree to be Kept
- Other Tree to be Removed
- Other Tree to be Kept
- Bit. Conc. to be Removed
- Play Equipment & Safety Surface to be Removed
- Gravel Paths to be Removed
- Sand to be Removed

Notes:

1. Existing storage shed will be removed from the site. Any replacement shed will not include a Conex type storage container or a membrane structure.
2. Existing septic tanks will be removed and leaching fields will be abandoned in accordance with Board of Health regulations and procedures. The new sewer system will be installed prior to beginning excavation for the proposed stormwater infiltration system.

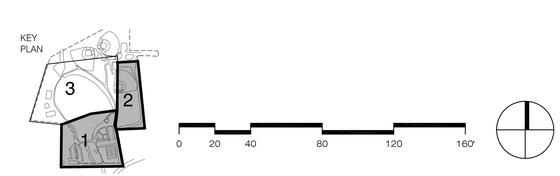

CBA | Landscape Architects LLC
24 THORNDIKE STREET | CAMBRIDGE MA 02141
phone 617.945.9760 | www.cbaland.com | cba@cbaland.com
landscape architecture
urban design
master planning

Improvements to Choate Park

Site Plan Submission

Existing Landscape Inventory & Removals: Sheet 1

REVISIONS:		
1	09-22-17	P.B. Comments
2	11-7-17	Record Set
DATE:		08/17/2017
SCALE:		1" = 40' - 0"
FILE:		Choate-EC.dwg
DWN BY:		AJK
CKD BY:		DJC
PROJ. # :		1612a

L3.2

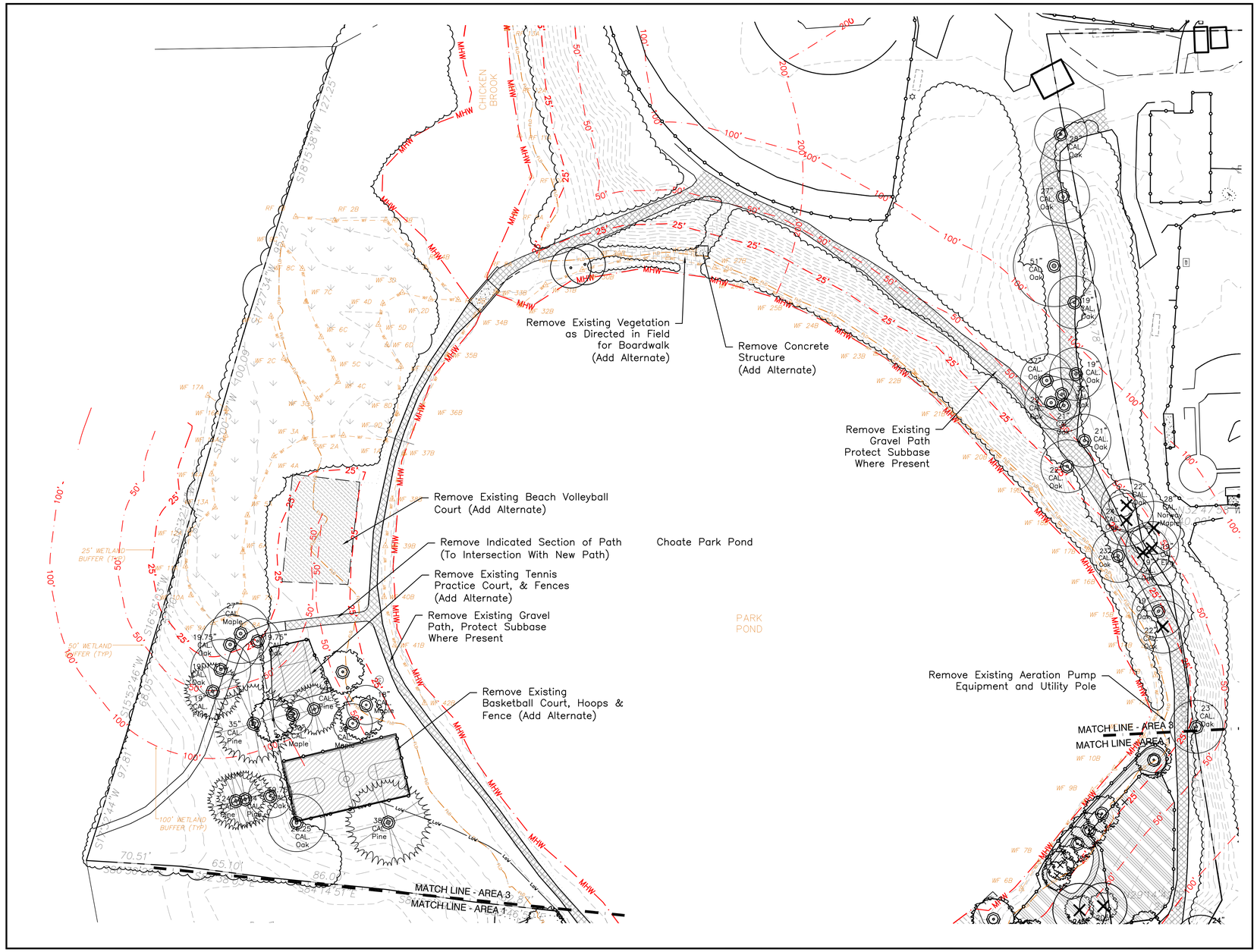

Legend:

- Property Line
- Edge of Water
- Forested Area
- Wetland Setback
- Erosion Control Sock
- Limit Of Work (w/o Erosion Controls)
- Stone Wall
- Large Caliper Tree to be Removed
- Large Caliper Tree to be Kept
- Other Tree to be Removed
- Other Tree to be Kept
- Bit. Conc. to be Removed
- Play Equipment & Safety Surface to be Removed
- Gravel Paths to be Removed
- Sand to be Removed

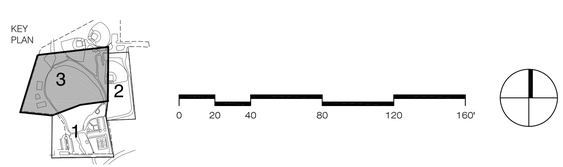

CBA | Landscape Architects LLC
24 THORNDIKE STREET I CAMBRIDGE MA 02141
phone 617.945.9760 I www.cbaland.com I cba@cbaland.com
landscape architecture
urban design
master planning

Improvements to Choate Park

Site Plan Submission

Existing Landscape Inventory & Removals: Sheet 2

REVISIONS:

1	09-22-17	P.B. Comments
2	11-7-17	Record Set

DATE:	08/17/2017
SCALE:	1" = 40' - 0"
FILE:	Choate-EC.dwg
DWN BY:	AJK
CKD BY:	DJC
PROJ. # :	1612a

L3.3

ZONING TABLE (SEE L3.1 FOR PARKING)

Zoning Classification:
AR–1 Agricultural–Residential 1

Building Height:
Lot 39–074 = (Pavilion) 16'–0"
Lot 39–078 = NA
Building Size:
30'–0" x 40'–0"
Lot Coverage:
Lot 39–074 = (Pavilion) 1200 S.F.
Lot 39–078 = NA
Gross Floor Area:
Lot 39–074 = (Pavilion) 1200 S.F.
Lot 39–078 = NA
Maximum Seating Capacity:
Lot 39–074 = 72 People (Pavilion)
Lot 39–078 = NA
Number of Employees:
Lot 39–074 = 0
Lot 39–078 = NA

Lot Area (Project is Comprised of 2 Lots):
Lot 39–074 = 17.38 Acres
Lot 39–078 = 4.40 Acres

Continuous Frontage:
Lot 39–074 = 420.5'
Lot 39–078 = 0'
Lot Depth:
Lot 42–58 = 1114'
Lot 42–57 = 694'
Lot Width:
Lot 42–58 = 680'
Lot 42–57 = 255'
Front Building Setback:
Pavilion = 299'–7"
Side Building Setback:
Pavilion = 112'–6"
Rear Building Setback:
Pavilion = 816'–9"

Key:

- Property Line
- Proposed Tubular Steel Fencing
- Setback Line
- Proposed Pedestrian Scale Light

FOR PERMIT ONLY

CBA | Landscape Architects LLC
24 THORNDIKE STREET I CAMBRIDGE MA 02141
phone 617.945.9760 I www.cbaland.com I cba@cbaland.com
landscape architecture
urban design
master planning

Improvements to Choate Park

Site Plan Submission

Site Improvements: Overview

REVISIONS:

1	09-22-17	P.B. Comments
2	11-7-17	Record Set

DATE:	08/17/2017
SCALE:	1" = 70'-0"
FILE:	Choate-Improvements.dwg
DWN BY:	AJK
CKD BY:	DJC
PROJ. # :	1612a

L4.0

Area 1: 1"=40'

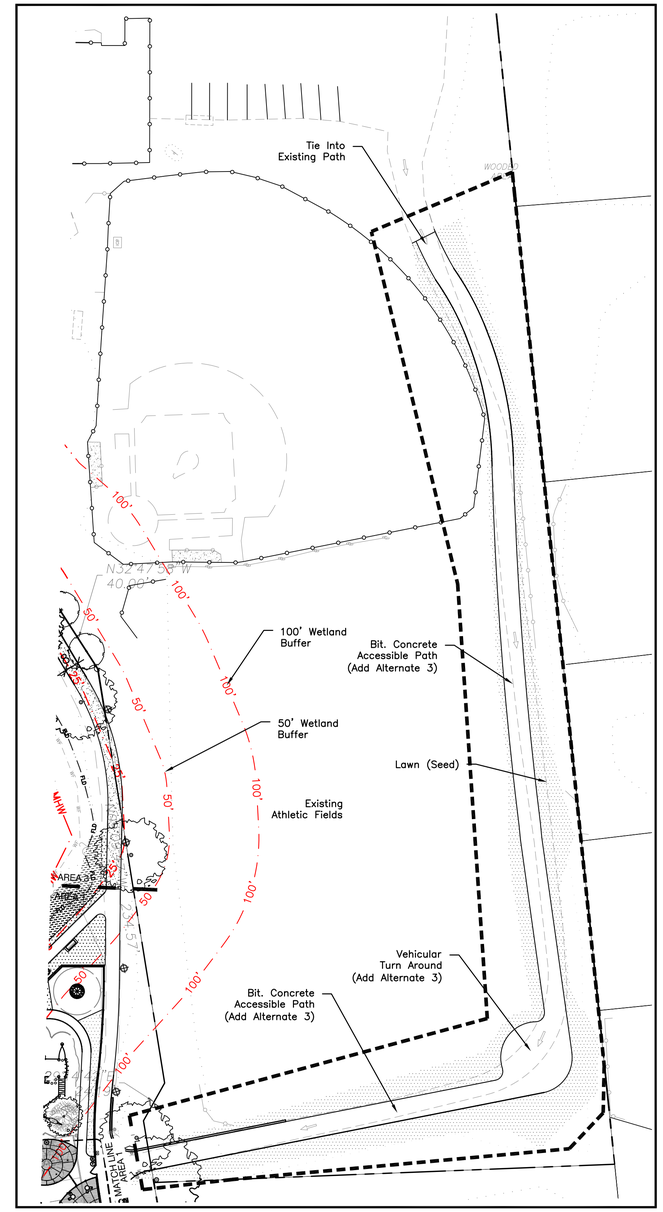

Area 2: 1"=40'

Materials Notes

1. The Contractor shall verify locations of and protect all utilities, drainage, and sub–drainage structures prior to commencing work. The Contractor will take sole responsibility for the cost incurred due to damage and replacement of all utilities damaged on the site.
2. Contractor shall verify all dimensions and elevations on the ground and report any discrepancies to the Landscape Architect prior to commencing construction.
3. All utility & drain lines to be coordinated with footings for site features.
4. Repair any damage to existing site features to remain and to any disruption beyond the limit of work.

Key:

- Property Line
- Match Line
- Add Alternate
- Limit of Work
- Proposed Tubular Steel Fencing
- Stone Dust Paving
- Lawn
- Meadow Mix
- Proposed Pedestrian Scale Light

Parking Table:

Number of Existing Parking Spaces: 47
Number of Proposed ADA Parking Spaces: 4
Number of Proposed Standard Parking Spaces: 53
Number of Proposed Compact Parking Spaces: 11
Total Number of Proposed Parking Spaces: 68

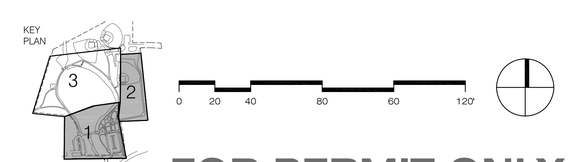

FOR PERMIT ONLY

CBA | Landscape Architects LLC
24 THORNDIKE STREET I CAMBRIDGE MA 02141
phone 617.945.9760 I www.cbaland.com I cba@cbaland.com
landscape architecture
urban design
master planning

Improvements to Choate Park

Site Plan Submission

Site Improvement Plan: Sheet 1

REVISIONS:

1	09-22-17	P.B. Comments
2	11-7-17	Record Set

DATE:	08/17/2017
SCALE:	1" = 40'-0"
FILE:	Choate-Improvements.dwg
DWN BY:	AJK
CKD BY:	DJC
PROJ. # :	1612a

L4.1

Key:

- Property Line
- Match Line
- Add Alternate
- Limit of Work
- Proposed Tubular Steel Fencing
- Stone Dust Paving
- Lawn
- Wet Meadow Mix
- Proposed Pedestrian Scale Light

Materials Notes

1. The Contractor shall verify locations of and protect all utilities, drainage, and sub–drainage structures prior to commencing work. The Contractor will take sole responsibility for the cost incurred due to damage and replacement of all utilities damaged on the site.
2. Contractor shall verify all dimensions and elevations on the ground and report any discrepancies to the Landscape Architect prior to commencing construction.
3. All utility & drain lines to be coordinated with footings for site features.
4. Repair any damage to existing site features to remain and to any disruption beyond the limit of work.

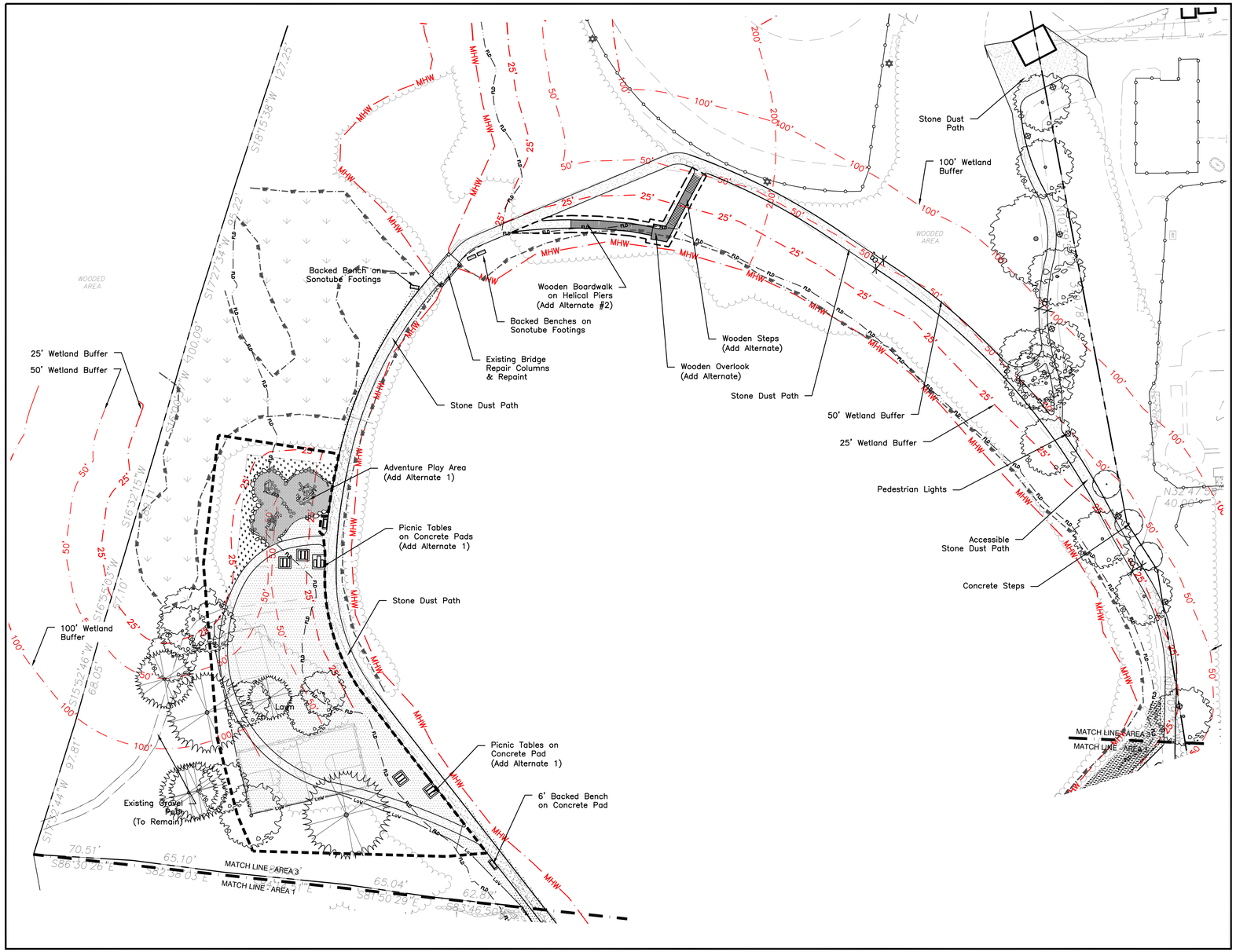

Area 3: 1"=40'

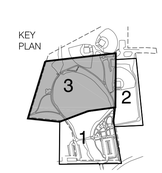

0 20 40 80 120 160'

FOR PERMIT ONLY

CBA | Landscape Architects LLC
24 THORNDIKE STREET I CAMBRIDGE MA 02141
phone 617.945.9760 I www.cbaland.com I cba@cbaland.com
landscape architecture
urban design
master planning

Improvements to Choate Park

Site Plan Submission

Site Improvment Plan: Sheet 2

REVISIONS:

1	09-22-17	P.B. Comments
2	11-7-17	Record Set

DATE:	08/17/2017
SCALE:	1" = 40' - 0"
FILE:	Choate-Improvements.dwg
DWN BY:	AJK
CKD BY:	DJC
PROJ. # :	1612a

L4.2

PLANTING AREAS BY TYPE

Lawn: 40,125 SF

Wildflower Mix: 16,300 SF

Shrubs: 9,410 SF

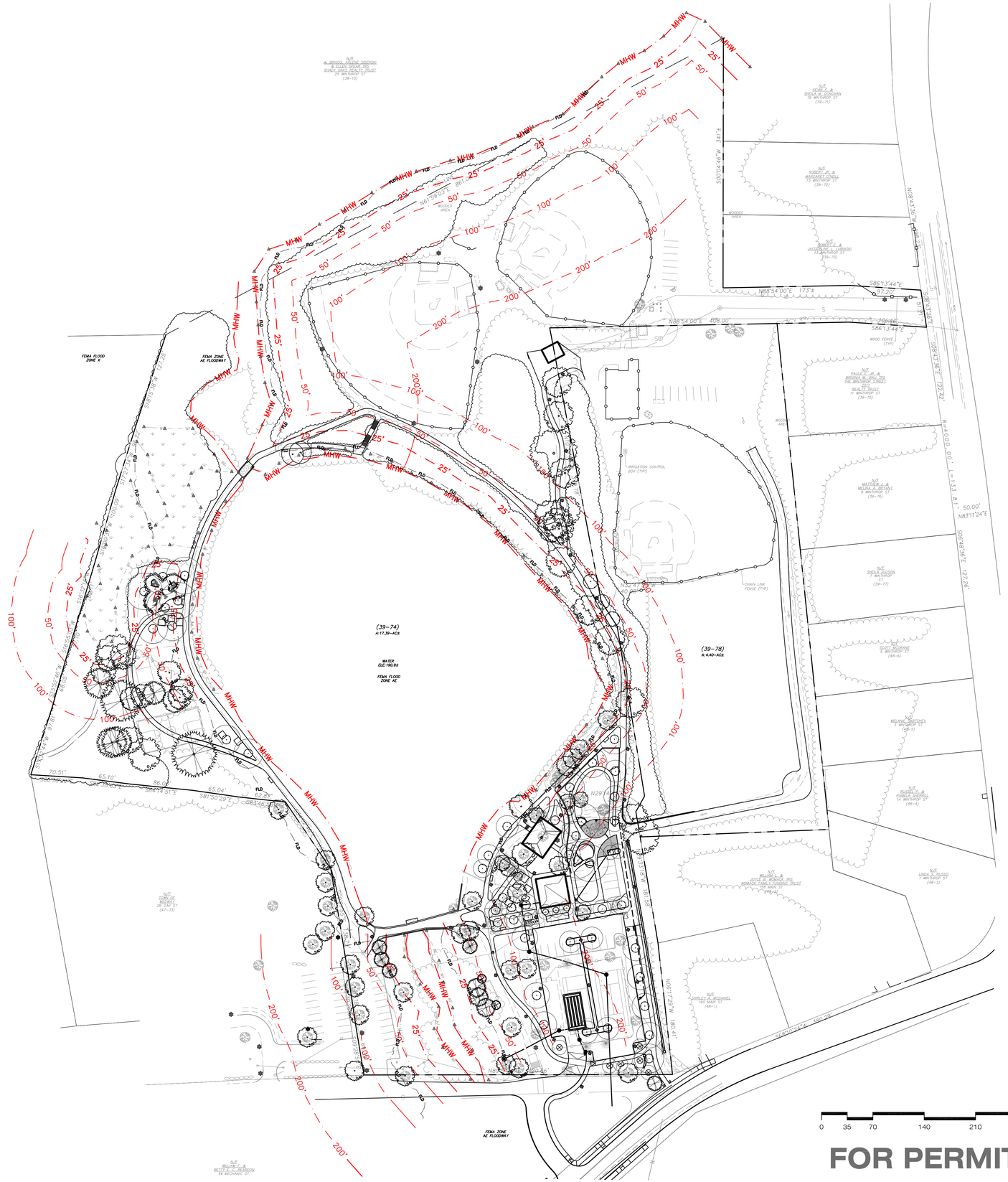

FOR PERMIT ONLY

Key:

- Property Line
- Proposed Tubular Steel Fencing
- Setback Line
- Proposed Pedestrian Scale Light

CBA | Landscape Architects LLC

24 THORNDIKE STREET I CAMBRIDGE MA 02141

phone 617.945.9760 I www.cbaland.com I cba@cbaland.com

landscape architecture
urban design
master planning

Improvements to Choate Park

Site Plan Submission

Vegetation Overview Plan

REVISIONS:		
1	09-22-17	P.B. Comments
2	11-7-17	Record Set
DATE:	08/17/2017	
SCALE:	1" = 70'-0"	
FILE:	Choate-Improvements.dwg	
DWN BY:	AJK	
CKD BY:	DJC	
PROJ. # :	1612a	

L4.3

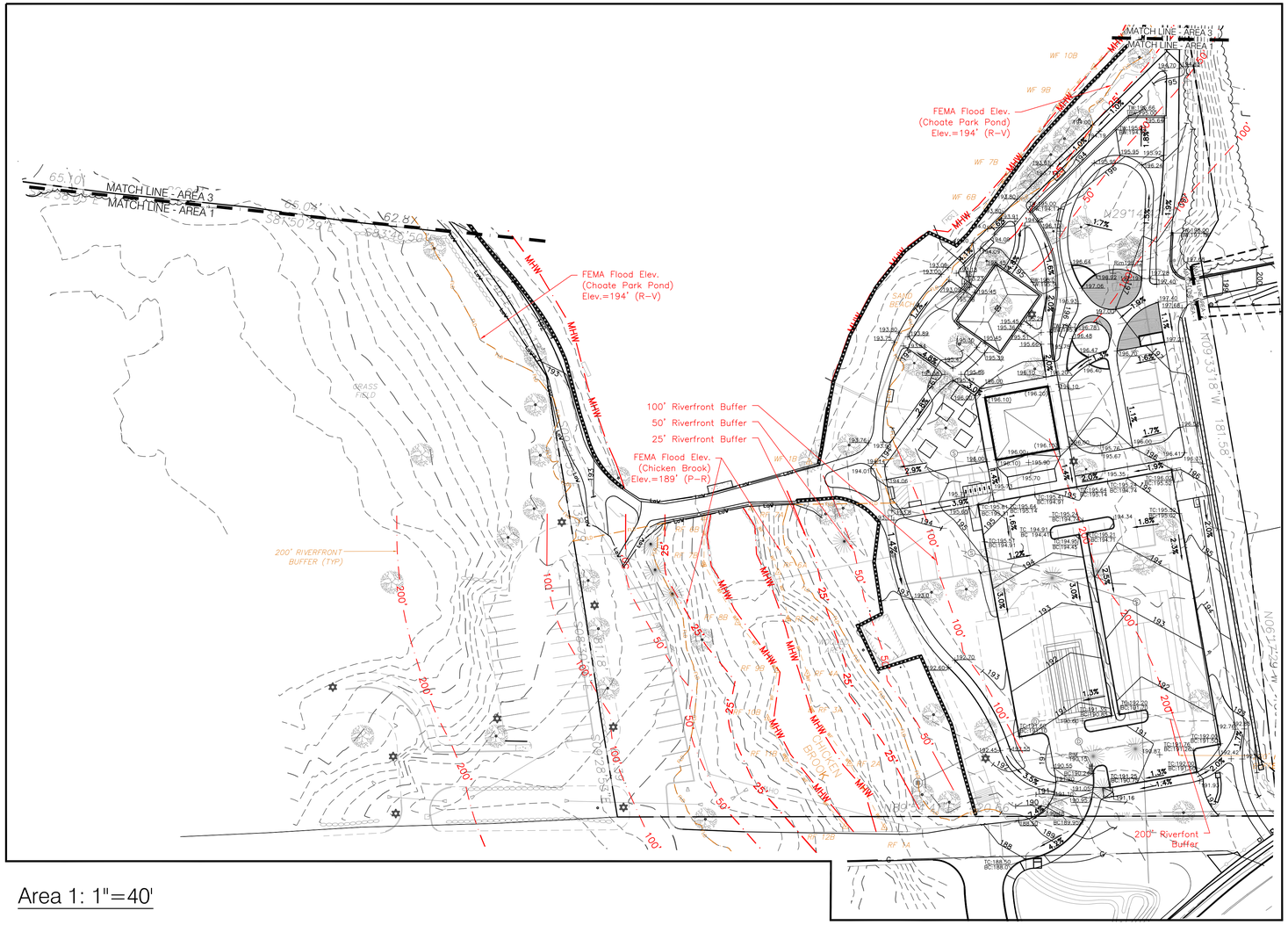

Area 1: 1"=40'

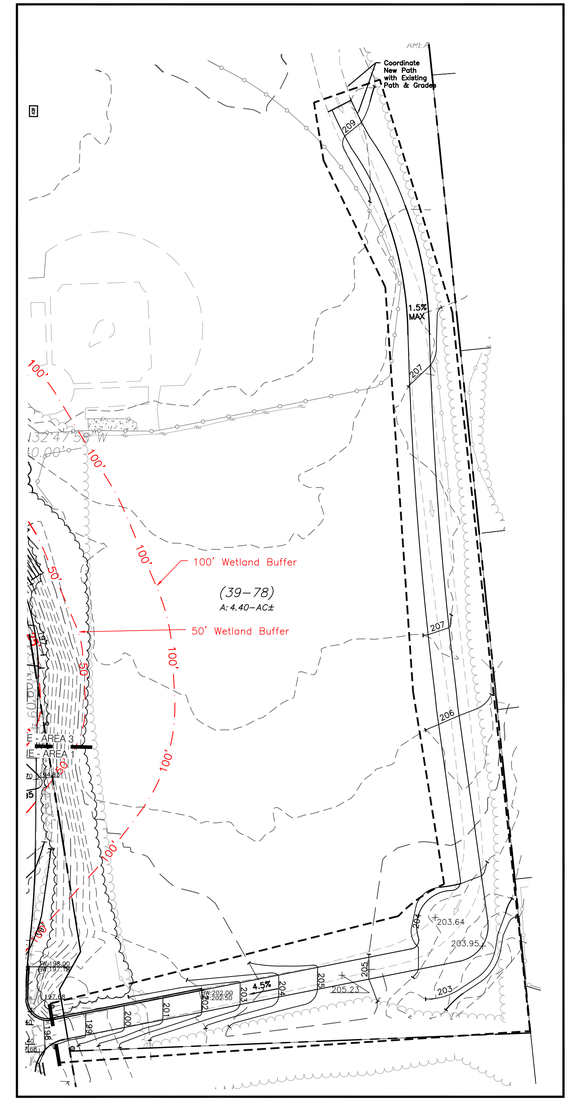

Area 2: 1"=40'

Grading Notes

1. The Landscape Contractor shall verify location of and protect all utilities, drainage, and sub-drainage structures prior to commencing work.
2. Landscape Contractor shall verify all dimensions and elevations on the ground and report any discrepancies to the Landscape Architect prior to commencing construction.
3. Grade stakes to be set for approval by The Landscape Architect prior to installation of gravel bases and prior to all paving, edges, and walls.
4. All transitions to existing grades to be smooth and gradual.
5. Cross slopes and slopes in rubber play areas are not to exceed 1.9% in any direction.
6. Grade surfaces to assure positive drainage away from all structures and to prevent ponding of surface drainage.
7. Pitch evenly between spot grading. Any discrepancies not allowing an even pitch to occur shall be reported to the Landscape Architect prior to continuing work.
8. Handicap Accessible Areas shall be in conformance with the rules and regulations of the Architectural Access Board and the American With Disabilities Act.
9. All utility & drain lines to be coordinated with footings for site features.
10. Repair any damage to existing site features to remain and to any disruption beyond the limit of work.
11. ALL REMOVALS & EXCAVATIONS outside Tree Protection Fencing but within the dripline of existing trees shall be HAND WORK or AIR SPADE ONLY. Cut NO ROOTS without the express permission of Landscape Architect or Owner's Representative. Provide 48 hours notice before all such work in "Hand Work Only" areas to allow Landscape Architect or Owner's Representative to observe work.

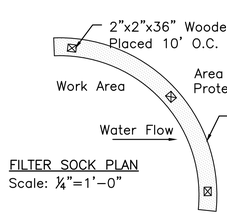

FILTER SOCK PLAN
Scale: ¼"=1'-0"

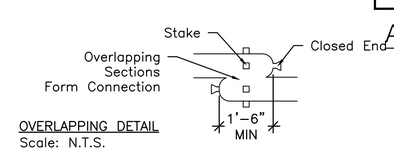

OVERLAPPING DETAIL
Scale: N.T.S.

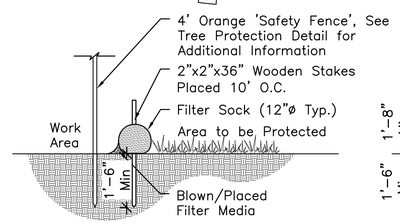

FILTER SOCK WITHOUT SILT FENCE
Scale: ½"=1'-0"

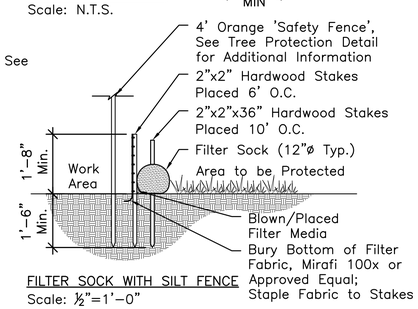

FILTER SOCK WITH SILT FENCE
Scale: ½"=1'-0"

Notes:
1. Erosion Control Socks to be Filtrexx Silt Soxx, or Approved Equal. (See 01 57 00)
2. Contractor to submit erosion control sock product information for approval by Landscape Architect.
3. Follow all manufactuerer's specifcations and instructions.
4. Snow Fence to be placed in front of all erosion control. See Tree Protection Detail for installation.

Erosion Control Sock

Scale: ½" = 1'-0"

Grading Key:

- Property Line
- Match Line
- Add Alternate
- Limit of Work
- Existing Contour
- Proposed Contour
- Erosion Control Sock
- 123.33 Spot Grade

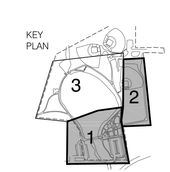

0 20 40 80 120 160'

FOR PERMIT ONLY

CBA | Landscape Architects LLC
24 THORNDIKE STREET | CAMBRIDGE MA 02141
phone 617.945.9760 | www.cbaland.com | cba@cbaland.com
landscape architecture
urban design
master planning

Improvements to Choate Park

Site Plan Submission

Grading, Drainage & Erosion Plan: Sheet 1

REVISIONS:

1	09-22-17	P.B. Comments
2	11-7-17	Record Set

DATE:	08/17/2017
SCALE:	1" = 40' - 0"
FILE:	CHO-Grading.dwg
DWN BY:	AJK
CKD BY:	DJC
PROJ. # :	1612a

L5.0

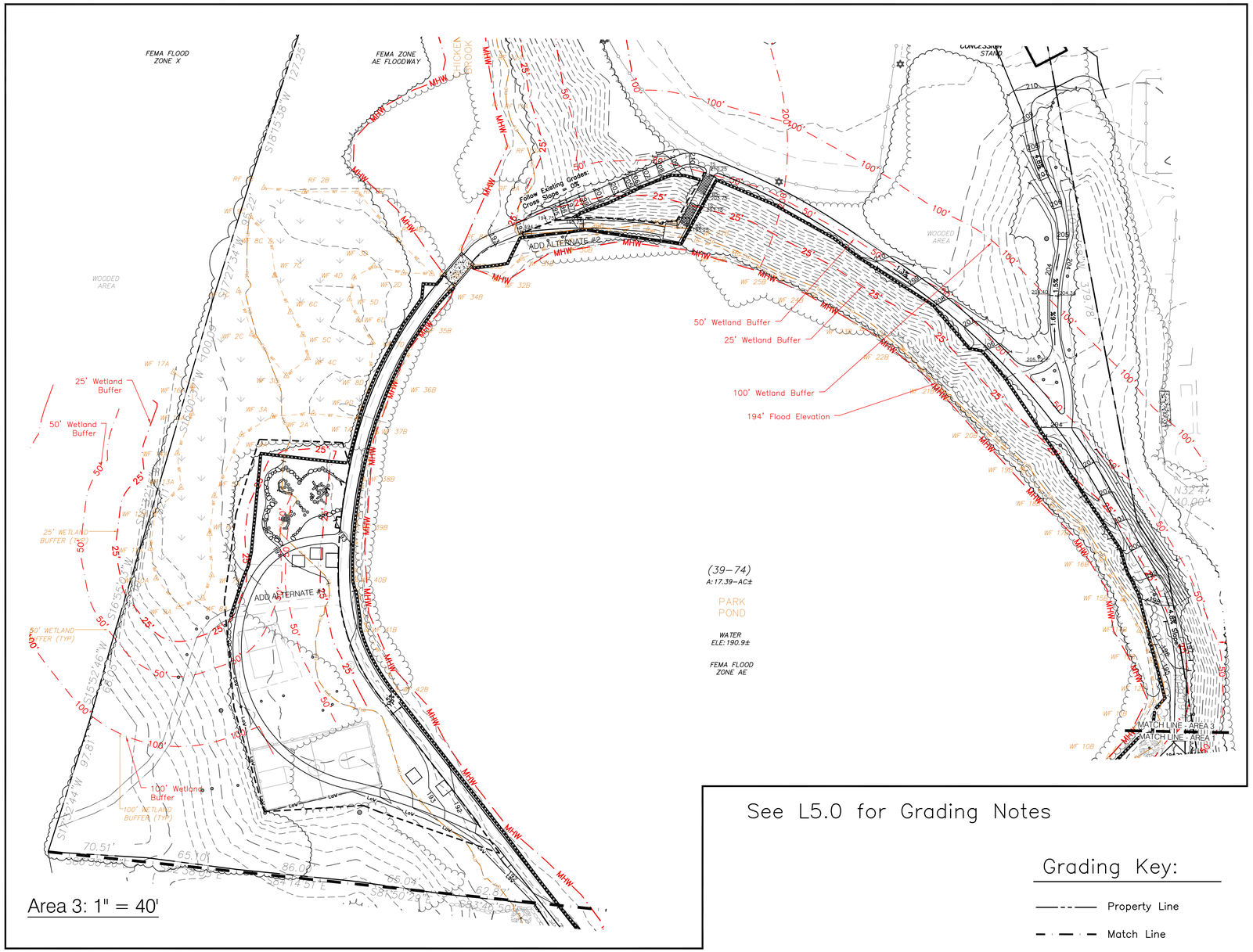

Area 3: 1" = 40'

See L5.0 for Grading Notes

Grading Key:

- Property Line
- Match Line
- Add Alternate
- Limit of Work
- Existing Contour
- Proposed Contour
- Erosion Control Sock
- 123.33 Spot Grade

KEY PLAN

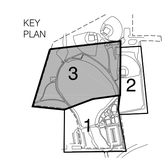

0 20 40 80 120 160'

FOR PERMIT ONLY

CBA | Landscape Architects LLC
24 THORNDIKE STREET I CAMBRIDGE MA 02141
phone 617.945.9760 I www.cbaland.com I cba@cbaland.com
landscape architecture
urban design
master planning

Improvements to Choate Park

Site Plan Submission

Grading, Drainage and Erosion Plan: Sheet 2

REVISIONS:

1	09-22-17	P.B. Comments
2	11-7-17	Record Set

DATE:	08/17/2017
SCALE:	1" = 40' - 0"
FILE:	CHO-Grading.dwg
DWN BY:	AJK
CKD BY:	DJC
PROJ. # :	1612a

L5.1

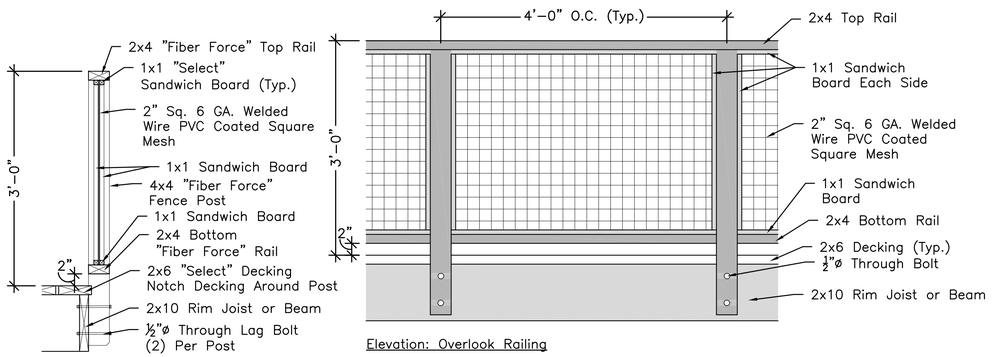

Notes:
1. All wood Members to be recycled plastic timbers as specified on detail 4 on L6.4.
2. SHOP DRAWINGS REQUIRED. Shop drawings to be reviewed and stamped by a MA Licensed Structural Engineer.

Overlook Railing (Add Alternate #2)

Scale: 1" = 1'-0"

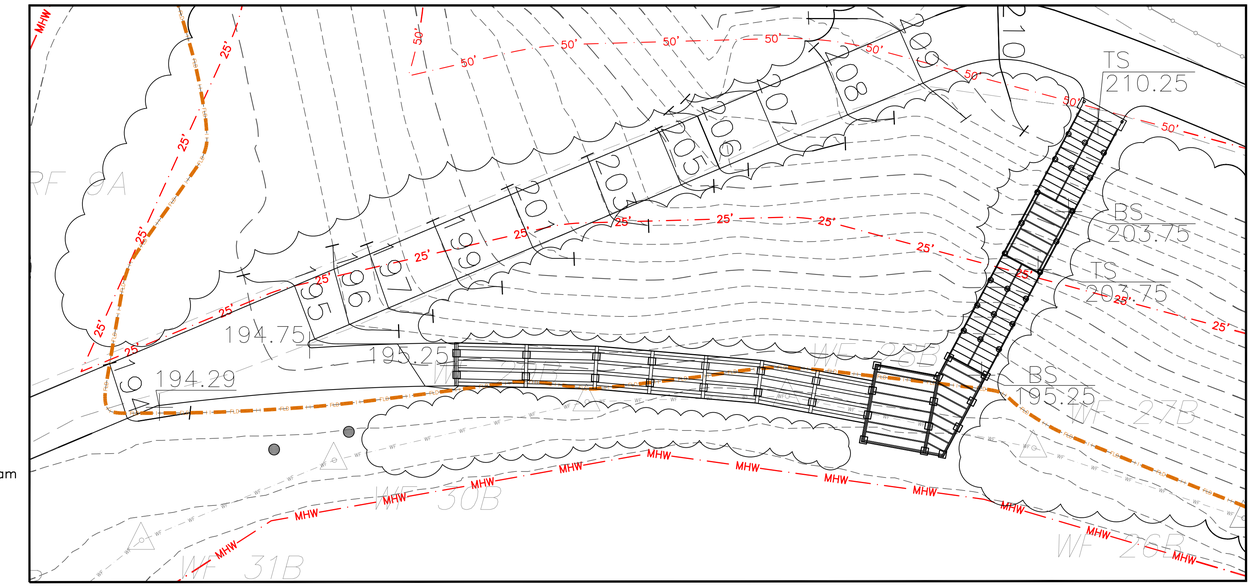

Footing Plan

Scale 1"=10'-0"

Footing Key:

- Concrete Footing
- Helical Pile

0 10 20 30 40 50'

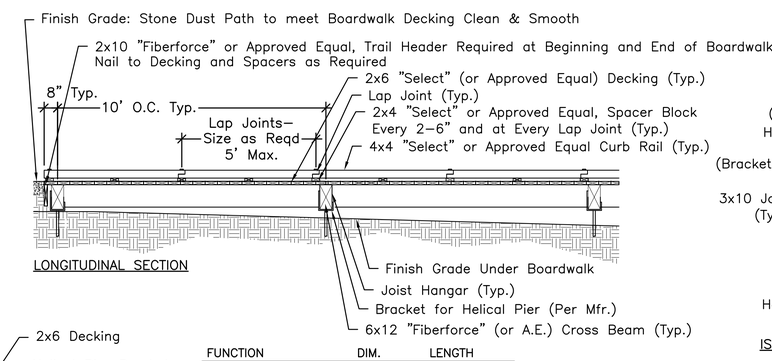

LONGITUDINAL SECTION

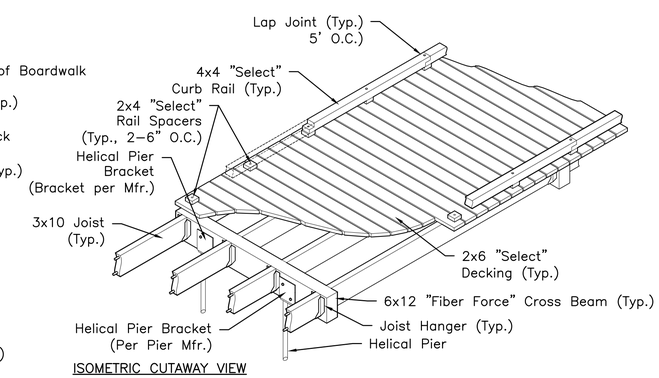

ISOMETRIC CUTAWAY VIEW

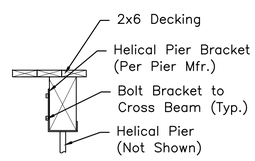

BRACKET WITH HELICAL PIER FOUNDATION
Scale: ¾"=1'-0"

FUNCTION	DIM.	LENGTH
CURB RAIL	4"X4"	5'-0"±
SPACER BLOCK	2"X4"	4"
DECKING	2"X6"	7'-0"
JOIST – EDGES	3"X10"	9'-7"±
JOIST – CENTER	3"X10"	9'-7"±
CROSS BEAMS	6"X12"	6'-6"
TRAIL HEADER	2"X10"	6'-6"

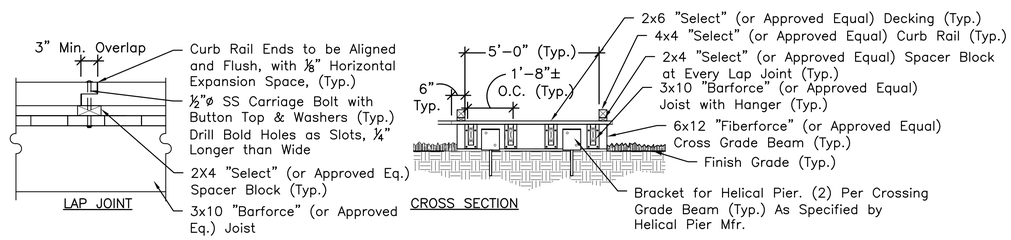

NOTES:

1. "Select" members shall be HDPE Recycled Plastic Lumber with at least 85% recycled content, "Select" by Bedford Technology, 2424 Armour Road, PO Box 609, Worthington, MN 56187–0609, Phone (507) 372–5558, or Approved Equal. Decking to have Simulated Wood Grain Top Surface.
2. "Fiberforce" members shall be HDPE Structural–Grade Recycled Plastic Lumber with at least 85% recycled content and added fiberglass strands for increased stiffness, "Fiberforce" by Bedford Technology or Approved Equal.
3. "Barforce" members shall be HDPE Structural–Grade Recycled Plastic Lumber with at least 85% recycled content, added fiberglass strands for increased stiffness, and two (2) ¾" Full–Length Fiberglass Reinforced Polymer Rods, "Barforce" by Bedford Technology or Approved Equal.
4. Color for all members to be "Mink" by Bedford Tech. or approved equal.
5. Helical Pilings to be by AB Chance, Support Works, or Approved Equal. Submit product literature, piling details, and piling plan for approval by Landscape Architect. Piling details and layout plan to be stamped by a MA Licensed Structural Engineer.
6. Assume 3,000 PSF soil bearing capacity for helical pier design calculations, to be confirmed.

Plastic Lumber Boardwalk with Helical Piers (Add Alternate #2)

Scale: ⅜" = 1'-0"

FOR PERMIT ONLY

CBA | Landscape Architects LLC
24 THORNDIKE STREET I CAMBRIDGE MA 02141
phone 617.945.9760 I www.cbaland.com I cba@cbaland.com
landscape architecture
urban design
master planning

Improvements to Choate Park

Site Plan Submission

Boardwalk Enlargement and Details

REVISIONS:		
1	09-22-17	P.B. Comments
2	11-7-17	Record Set
DATE:		-
SCALE:		AS NOTED
FILE:		CHO-Grading.dwg
DWN BY:		AJK
CKD BY:		DJC
PROJ. # :		1612a

L5.2

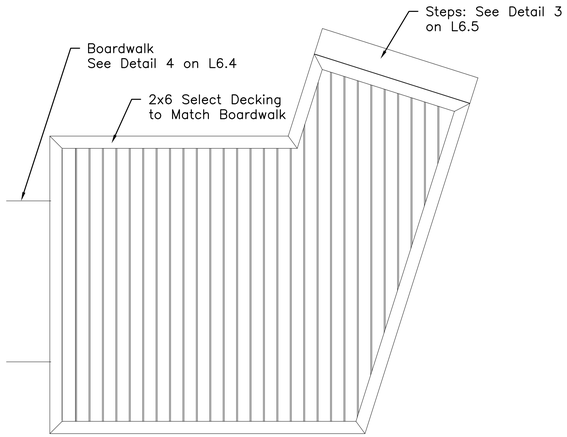

DECKING PLAN
Scale: ⅜"=1'–0"

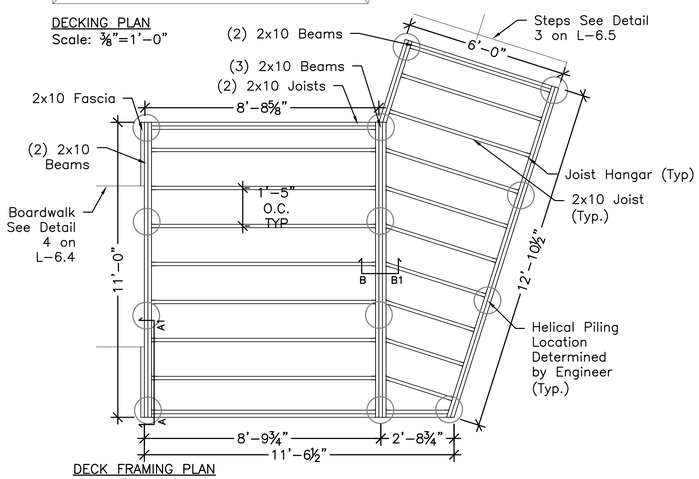

DECK FRAMING PLAN
Scale: ⅜"=1'–0"

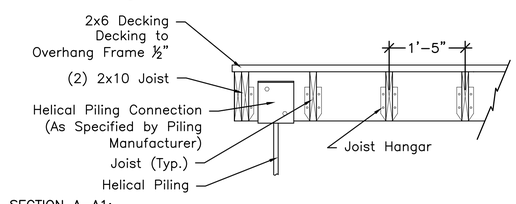

SECTION A–A1:
Scale: ¾"=1'–0"

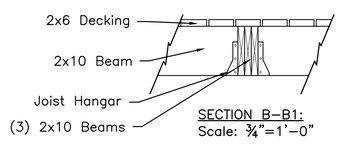

SECTION B–B1:
Scale: ¾"=1'–0"

NOTES:

1. "Select Decking" members shall be HDPE Recycled Plastic Lumber with at least 85% recycled content, "Select" by Bedford Technology, 2424 Armour Road, PO Box 609, Worthington, MN 56187–0609, Phone (507) 372–5558, or Approved Equal. Decking to have Simulated Wood Grain Top Surface.
2. 2x10 Joists and Beams are to be pressure treated lumber. Contractor to submit product literature for approval by Landscape Architect.
3. Color for all HDPE members to be "Mink" by Bedford Tech, or approved equal.
4. Helical Pilings to be by AB Chance, Support Works, or approved equal. Submit product literature, piling details, and piling plan for approval by Landscape Architect. Piling details and layout plan to be stamped by a MA Licensed Structural Engineer.
5. For Railings See Detail 2 on L–6.5.
6. Assume 3,000 PSF soil bearing capacity for helical pier design calculations, to be confirmed.

Large Wooden Deck (Add Alternate #2)

Scale: ⅜" = 1'–0"

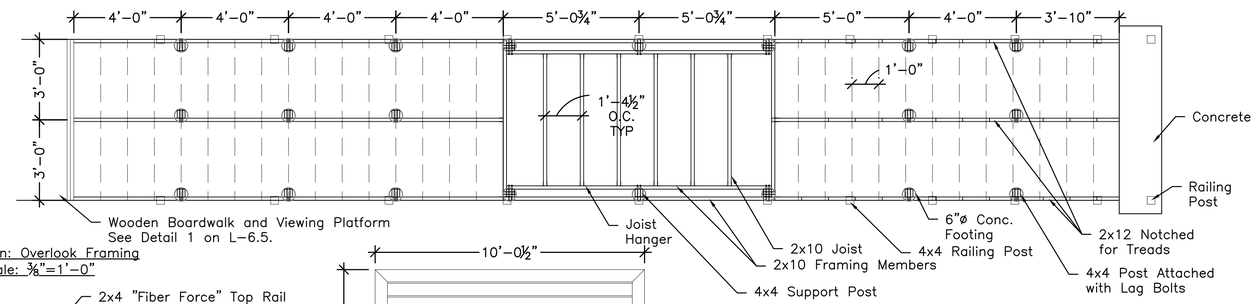

Plan: Overlook Framing
Scale: ⅜"=1'–0"

Section: Railing
Scale: ¾"=1'–0"

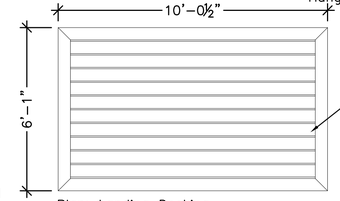

Plan: Landing Decking
Scale: ⅜"=1'–0"

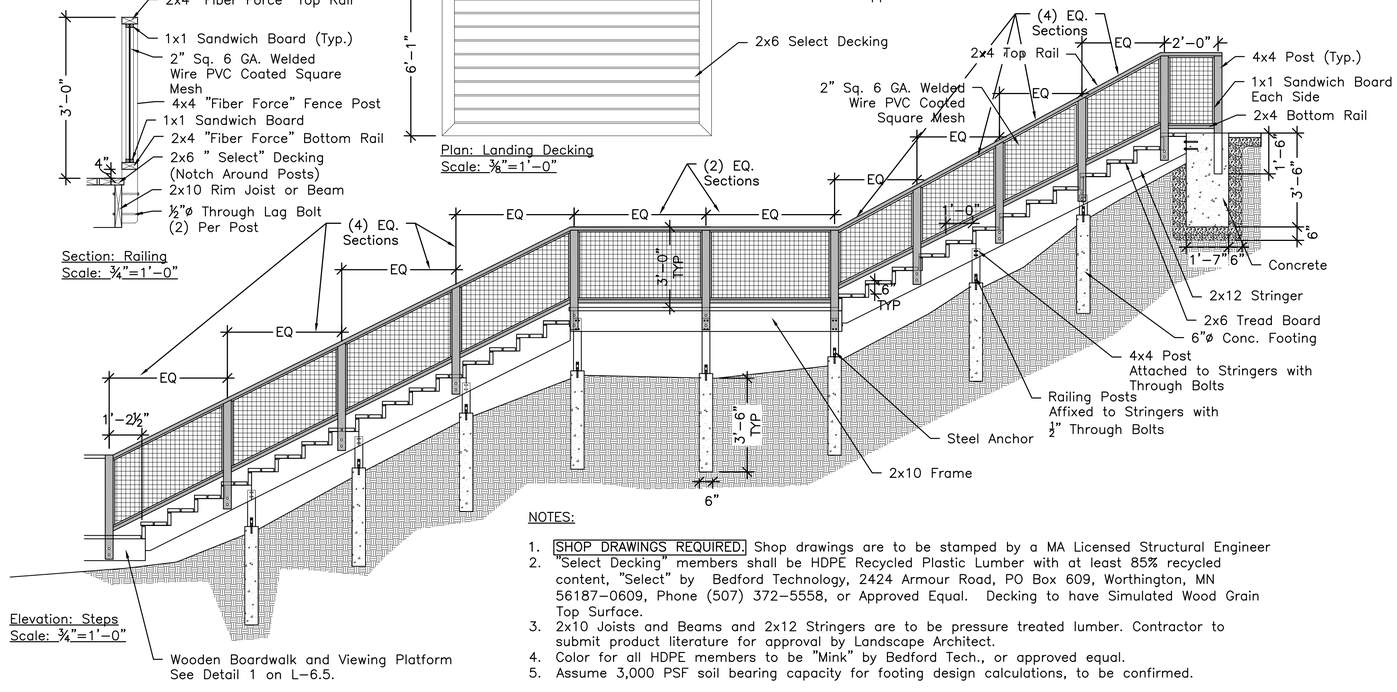

Elevation: Steps
Scale: ¾"=1'–0"

NOTES:

1. SHOP DRAWINGS REQUIRED. Shop drawings are to be stamped by a MA Licensed Structural Engineer
2. "Select Decking" members shall be HDPE Recycled Plastic Lumber with at least 85% recycled content, "Select" by Bedford Technology, 2424 Armour Road, PO Box 609, Worthington, MN 56187–0609, Phone (507) 372–5558, or Approved Equal. Decking to have Simulated Wood Grain Top Surface.
3. 2x10 Joists and Beams and 2x12 Stringers are to be pressure treated lumber. Contractor to submit product literature for approval by Landscape Architect.
4. Color for all HDPE members to be "Mink" by Bedford Tech., or approved equal.
5. Assume 3,000 PSF soil bearing capacity for footing design calculations, to be confirmed.

Wooden Steps with Landing (Add Alternate #2)

Scale: ⅜" = 1'–0"

FOR PERMIT ONLY

CBA | Landscape Architects LLC
24 THORNDIKE STREET | CAMBRIDGE MA 02141
phone 617.945.9760 | www.cbaland.com | cba@cbaland.com
landscape architecture
urban design
master planning

Improvements to Choate Park

Site Plan Submission

Boardwalk Details

REVISIONS:		
1	09-22-17	P.B. Comments
2	11-7-17	Record Set
DATE:	08/17/2017	
SCALE:	AS NOTED	
FILE:	CHO-Grading.dwg	
DWN BY:	AJK	
CKD BY:	DJC	
PROJ. # :	1612a	

L5.3

Planting Notes

1. The Landscape Contractor shall protect all utilities prior to starting construction.
2. The Contractor shall supply all plant materials in quantities sufficient to complete all planting shown on these drawings.
3. All plant materials to conform to guidelines established by the American Standard for Nursery Stock published by the American Assn. of Nurserymen, current edition.
4. All plant materials to be selected by the Landscape Architect with the Contractor at the nursery.
5. All plants to be located on the site for approval of the Landscape Architect prior to planting.
6. If the plant list does not agree with the planting plan, the plan shall be followed.
7. The Contractor shall guarantee all plant materials and lawns for one year following final acceptance. See Specifications for conditions of final acceptance.
8. All plant beds to receive 3" shredded bark mulch; supply sample for approval of Landscape Architect.
9. All planting beds to have a minimum 12" depth of topsoil.
10. All areas called out as lawn within Limit of Landscape Workis to be hydroseeded lawn. Remove old lawn, weeds and mulch, and rototill. Add topsoil so that all lawns have a minimum 6" depth of topsoil. See Specs for requirements.
11. Areas on the plan called out as wildflower mix are to be planted with New England Showy Wildflower Seed Mix by New England Wetland Plants of Amherst, MA, or approved equal.
12. No substitution of plant materials shall be allowed without approval of Landscape Architect.

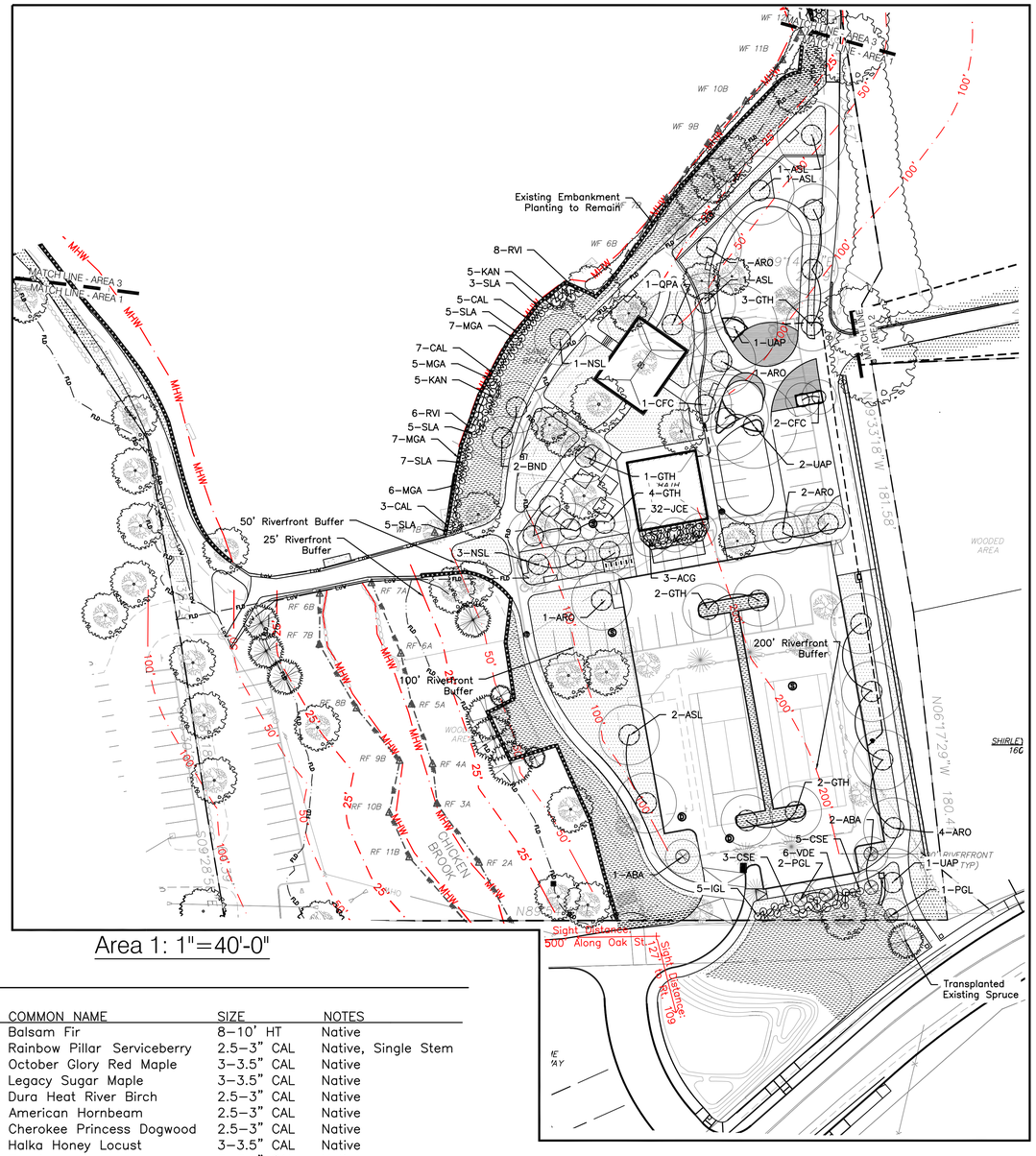

Area 1: 1"=40'-0"

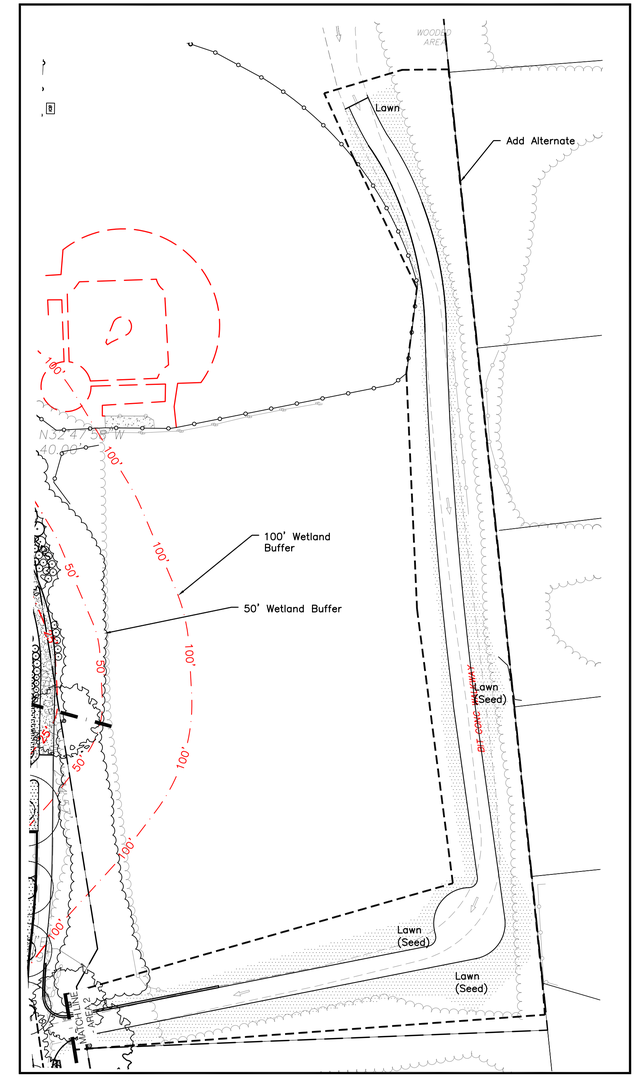

Area 2: 1"=40'-0"

Plant List – Area 1

TREES

SYM	QTY	BOTANICAL NAME	COMMON NAME	SIZE	NOTES
ABA	5	Abies balsamea	Balsam Fir	8–10' HT	Native
ACG	3	Amelanchier canadensis 'Glenform'	Rainbow Pillar Serviceberry	2.5–3" CAL	Native, Single Stem
ARO	9	Acer rubrum 'October Glory'	October Glory Red Maple	3–3.5" CAL	Native
ASL	5	Acer saccharum 'Legacy'	Legacy Sugar Maple	3–3.5" CAL	Native
BND	2	Betula nigra 'Dura Heat'	Dura Heat River Birch	2.5–3" CAL	Native
CCA	3	Carpinus caroliniana	American Hornbeam	2.5–3" CAL	Native
CFC	3	Cornus florida 'Cherokee Princess'	Cherokee Princess Dogwood	2.5–3" CAL	Native
GTH	12	Gleditsia triacanthos 'Halka'	Halka Honey Locust	3–3.5" CAL	Native
NSL	4	Nyssa sylvatica	Tupelo	3–3.5" CAL	Native
PGL	2	Picea glauca	White Spruce	8–10' HT	Native
QPA	1	Quercus palustris	Pin Oak	3–3.5" CAL	Native
UAP	4	Ulmus americana 'Princeton'	Princeton American Elm	3–3.5" CAL	Native

SHRUBS – POND EDGE PLANTING

SYM	QTY	BOTANICAL NAME	COMMON NAME	SIZE	NOTES
CAL	15	Clethra alnifolia	Summersweet	2–2.5' HT	Native
KAN	10	Kalmia angustifolia	Sheep Laurel	1.5–2' HT	Native
MGA	25	Myrica gale	Sweetgale	2–3' HT	Native
RVI	14	Rhododendron viscosum	Swamp Azalea	4–5' HT	Native
SLA	22	Spiraea latifolia	Common Meadowsweet	2–2.5' HT	Native

SHRUBS – ENTRY AREA

SYM	QTY	BOTANICAL NAME	COMMON NAME	SIZE	NOTES
CSE	8	Cornus sericea	Red Oiser Dogwood	3–4' HT	Native
IGL	5	Ilex glabra	Inkberry	3–4' HT	Native
VDE	6	Viburnum dentatum	Arrowwood Viburnum	4–5' HT	Native

SHRUBS – EXISTING BATHROOM BUILDING SCREENING

SYM	QTY	BOTANICAL NAME	COMMON NAME	SIZE	NOTES
JCE	32	Juniperus communis 'Effusa'	Effusa Common Juniper	2–3' SPD	Native

Key:

- New Deciduous Tree
- New Evergreen Tree
- Existing Deciduous Tree
- Existing Evergreen Tree
- Shrub
- Lawn
- Wildflower Mix

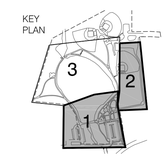

0 20 40 80 120 160'

FOR PERMIT ONLY

CBA | Landscape Architects LLC
24 THORNDIKE STREET I CAMBRIDGE MA 02141
phone 617.945.9760 I www.cbaland.com I cba@cbaland.com
landscape architecture
urban design
master planning

Improvements to Choate Park

Site Plan Submission

Landscape Plan: Sheet 1

REVISIONS:		
1	09-22-17	P.B. Comments
2	11-7-17	Record Set
DATE:	08/17/2017	
SCALE:	1" = 40' - 0"	
FILE:	CHO-Landscape.dwg	
DWN BY:	AJK	
CKD BY:	DJC	
PROJ. # :	1612a	

L6.0

Planting Notes

1. The Landscape Contractor shall protect all utilities prior to starting construction.
2. The Contractor shall supply all plant materials in quantities sufficient to complete all planting shown on these drawings.
3. All plant materials to conform to guidelines established by the American Standard for Nursery Stock published by the American Assn. of Nurserymen, current edition.
4. All plant materials to be selected by the Landscape Architect with the Contractor at the nursery.
5. All plants to be located on the site for approval of the Landscape Architect prior to planting.
6. If the plant list does not agree with the planting plan, the plan shall be followed.
7. The Contractor shall guarantee all plant materials and lawns for one year following final acceptance. See Specifications for conditions of final acceptance.
8. All plant beds to receive 3" shredded bark mulch; supply sample for approval of Landscape Architect.
9. All planting beds to have a minimum 12" depth of topsoil.
10. All areas called out as lawn within Limit of Landscape Workis to be hydroseeded lawn. Remove old lawn, weeds and mulch, and rototill. Add topsoil so that all lawns have a minimum 6" depth of topsoil. See Specs for requirements.
11. Areas on the plan called out as wildflower mix are to be planted with New England Showy Wildflower Seed Mix by New England Wetland Plants of Amherst, MA, or approved equal.
12. Areas called out on the plan as tall grass/ rain garden are to be planted with New England Erosion Control/ Restoration Mix for Detention Basins and Moist Sites by New England Wetland Plants of Amherst, MA, or approved equal.
13. No substitution of plant materials shall be allowed without approval of Landscape Architect.

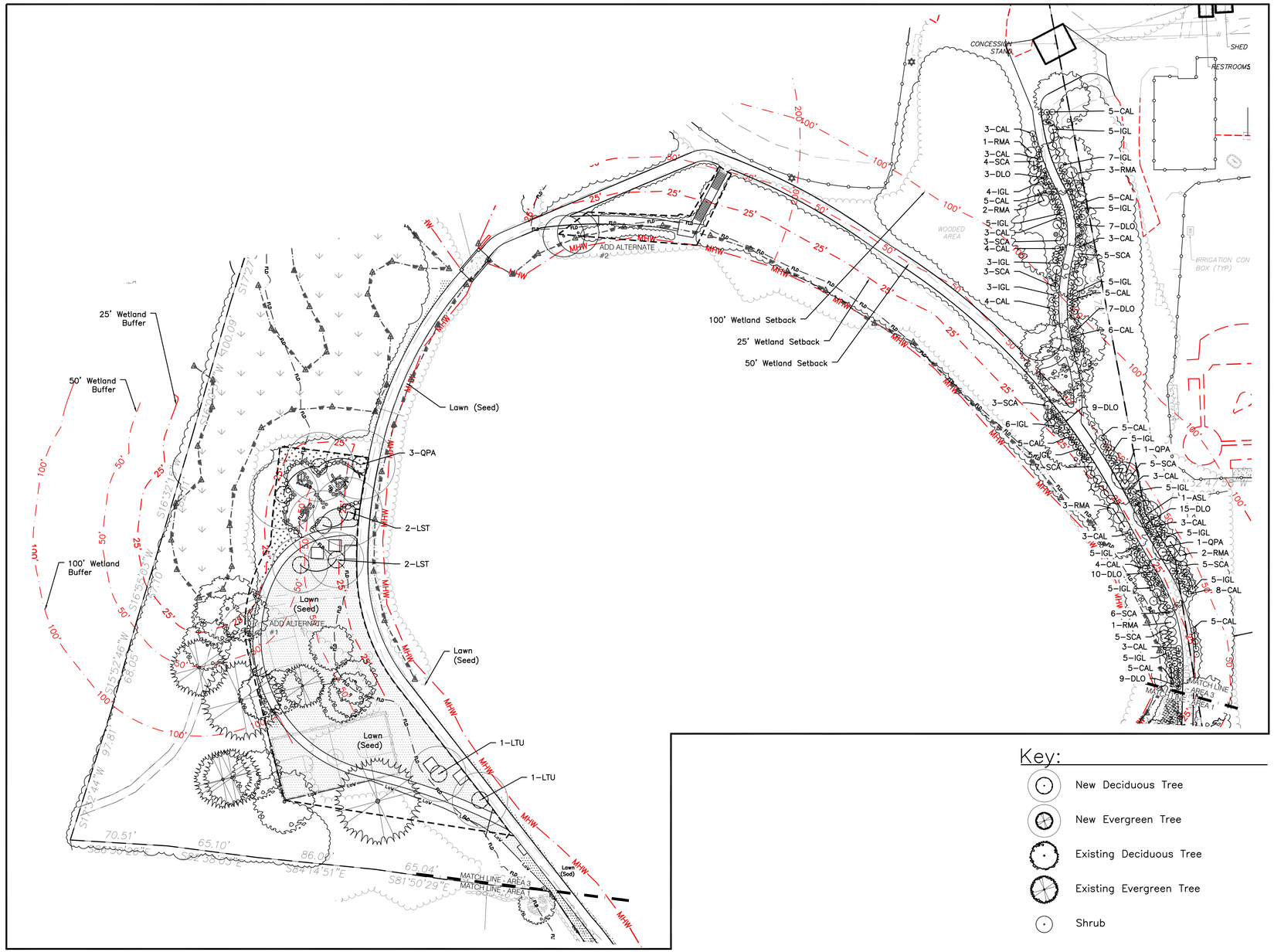

Area 3: 1" = 40'-0"

Key:

- New Deciduous Tree
- New Evergreen Tree
- Existing Deciduous Tree
- Existing Evergreen Tree
- Shrub
- Lawn
- Wildflower Mix

Plant List:

TREES – BASE BID

SYM	QTY	BOTANICAL NAME	COMMON NAME	SIZE	NOTES
ASL	1	Acer saccharum 'Legacy'	Legacy Sugar Maple	3–3.5" CAL	Native
QPA	2	Quercus palustris	Pin Oak	3–3.5" CAL	Native

TREES – ADD ALTERNATE

SYM	QTY	BOTANICAL NAME	COMMON NAME	SIZE	NOTES
LST	4	Liquidambar styraiflua	American Sweetgum	3–3.5" CAL	Native
LTU	2	Liriodendron tulipifera	Tulip Tree	3–3.5" CAL	Native
QPA	3	Quercus palustris	Pin Oak	3–3.5" CAL	Native

SHRUBS – BASE BID

SYM	QTY	BOTANICAL NAME	COMMON NAME	SIZE	NOTES
CAL	90	Clethra alnifolia	Summersweet	4–5' HT	Native
DLO	60	Diervilla lonicera	Northern Bush Honeysuckle	2.5–3' HT	Native
IGL	83	Ilex glabra	Inkberry	4–5' HT	Native
RMA	12	Rhododendron maximum	Great Laurel	6–8' HT	Native
SCA	46	Sambucus canadensis	Black Elderberry	4–5' HT	Native

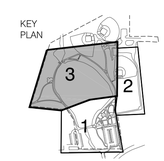

0 20 40 80 120 160'

FOR PERMIT ONLY

CBA | Landscape Architects LLC
24 THORNDIKE STREET I CAMBRIDGE MA 02141
phone 617.945.9760 I www.cbaland.com I cba@cbaland.com
landscape architecture
urban design
master planning

Improvements to Choate Park

Site Plan Submission

Landscape Plan: Sheet 2

REVISIONS:		
1	09-22-17	P.B. Comments
2	11-7-17	Record Set
DATE:	08/17/2017	
SCALE:	1" = 40' - 0"	
FILE:	CHO-Landscape.dwg	
DWN BY:	AJK	
CKD BY:	DJC	
PROJ. # :	1612a	

L6.1

PLANTING AREAS BY TYPE

Lawn: 40,125 SF

Wildflower Mix: 16,300 SF

Shrubs: 9,410 SF

Key:

- Proposed Lawn Areas
- Proposed Wildflower / Habitat Mix
- Areas of Proposed Shrub Planting

FOR PERMIT ONLY

CBA | Landscape Architects LLC
24 THORNDIKE STREET | CAMBRIDGE MA 02141
phone 617.945.9760 | www.cbaland.com | cba@cbaland.com
landscape architecture
urban design
master planning

Improvements to Choate Park

Site Plan Submission

Vegetation Overview Plan

REVISIONS:		
1	09-22-17	P.B. Comments
2	11-7-17	Record Set
DATE:		09/14/2017
SCALE:		1" = 70'-0"
FILE:		Choate-Improvements.dwg
DWN BY:		AJK
CKD BY:		DJC
PROJ. # :		1612a

L6.2

Planting Notes

1. The Landscape Contractor shall protect all utilities prior to starting construction.
2. The Contractor shall supply all plant materials in quantities sufficient to complete all planting shown on these drawings.
3. All plant materials to conform to guidelines established by the American Standard for Nursery Stock published by the American Assn. of Nurserymen, current edition.
4. All plant materials to be selected by the Landscape Architect with the Contractor at the nursery.
5. All plants to be located on the site for approval of the Landscape Architect prior to planting.
6. If the plant list does not agree with the planting plan, the plan shall be followed.
7. The Contractor shall guarantee all plant materials and lawns for one year following final acceptance. See Specifications for conditions of final acceptance.
8. All plant beds to receive 3" shredded bark mulch; supply sample for approval of Landscape Architect.
9. All planting beds to have a minimum 12" depth of topsoil.
10. All areas called out as lawn within Limit of Landscape Workis to be hydroseeded lawn. Remove old lawn, weeds and mulch, and rototill. Add topsoil so that all lawns have a minimum 6" depth of topsoil. See Specs for requirements.
11. Areas on the plan called out as wildflower mix are to be planted with New England Showy Wildflower Seed Mix by New England Wetland Plants of Amherst, MA, or approved equal.
12. No substitution of plant materials shall be allowed without approval of Landscape Architect.

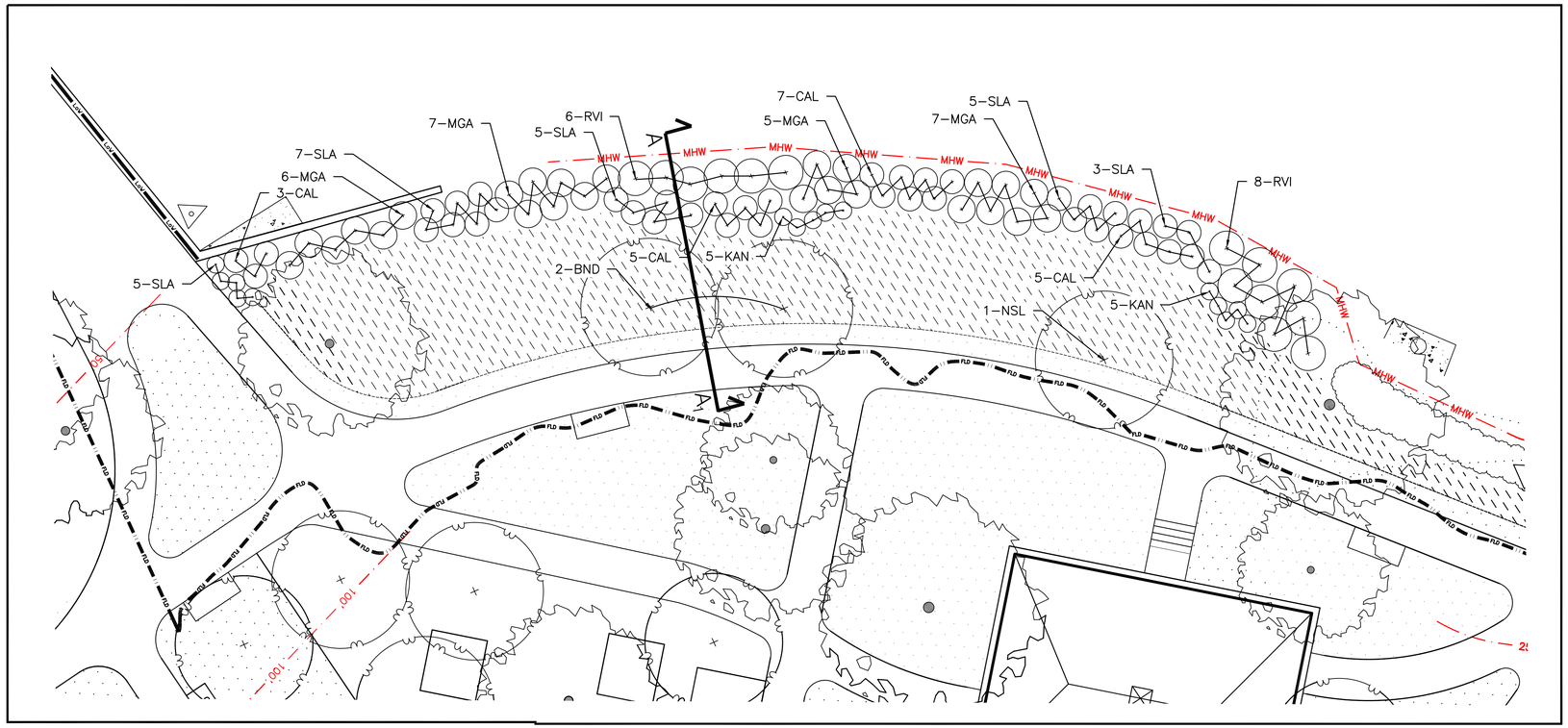

Beach Enlargement: 1"=10'-0"

Beach Section: 1/8"=1'-0"

Plant List – Beach Enlargement

TREES

SYM	QTY	BOTANICAL NAME	COMMON NAME	SIZE	NOTES
BND	2	Betula nigra 'Dura Heat'	Dura Heat River Birch	2.5–3" CAL	Native
NSL	1	Nyssa sylvatica	Tupelo	3–3.5" CAL	Native

SHRUBS – POND EDGE PLANTING

SYM	QTY	BOTANICAL NAME	COMMON NAME	SIZE	NOTES
CAL	15	Clethra alnifolia	Summersweet	2–2.5' HT	Native
KAN	10	Kalmia angustifolia	Sheep Laurel	1.5–2' HT	Native
MGA	25	Myrica gale	Sweetgale	2–3' HT	Native
RVI	14	Rhododendron viscosum	Swamp Azalea	4–5' HT	Native
SLA	22	Spiraea latifolia	Common Meadowsweet	2–2.5' HT	Native

Key:

- New Deciduous Tree
- New Evergreen Tree
- Existing Deciduous Tree
- Existing Evergreen Tree
- Shrub
- Lawn
- Wildflower Mix
- Wet Meadow Mix

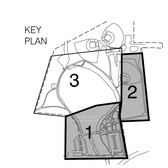

FOR PERMIT ONLY

CBA | Landscape Architects LLC
24 THORNDIKE STREET | CAMBRIDGE MA 02141
phone 617.945.9760 | www.cbaland.com | cba@cbaland.com
landscape architecture
urban design
master planning

Improvements to Choate Park

Site Plan Submission

Landscape Plan: Beach Enlargement

REVISIONS:		
1	09-22-17	P.B. Comments
1	11-17-17	Record Set

DATE:	08/17/2017
SCALE:	AS NOTED
FILE:	CHO-Landscape.dwg
DWN BY:	AJK
CKD BY:	DJC
PROJ. # :	1612a

L6.3

**Structure Erection: Installation of this structure is to be done with a competent supervisor in the construction trades. This supervisor must be capable of reading the drawing(s) & following Cedar Forest Products' installation instructions using good construction practices and procedures. The contractor will be required to shim, cut and make adjustments of fitting for proper building erection.

** Returns: After receipt of materials, the general contractor is responsible for the condition. No merchandise can be returned without written authorization. Merchandise with return authorization must be in saleable condition. A 35% restocking fee will be charged. Merchandise to be returned must be shipped insured and freight prepaid.

**Cedar Forest Products will not be liable for any unauthorized field work purchases to repair/replace/furnish materials. Any purchases must have prior written approval from Cedar Forest Products.

THE FOLLOWING WILL BE THE RESPONSIBILITY OF OTHERS

1. ALL CONSTRUCTION SHOULD MEET STATE & LOCAL BLDG. CODE RQMTS.
2. ASSUMED SOIL BEARING CAPACITY = 3,000 P.S.F. ALL FOOTINGS TO BEAR ON UNDISTURBED SOIL.
3. CONSULT WITH A LOCAL REGISTERED STRUCTURAL ENGINEER IF SOIL BEARING CONDITIONS ARE OTHER THAN ABOVE.
4. DESIGN, EXCAVATION AND CONSTRUCTION OF THE STRUCTURE(S) FOUNDATION MUST BE VERIFIED BY A REGISTERED STRUCTURAL ENGINEER.
5. DETERMINE ALL DESIGN LOADS PER LOCAL CODES.
6. CONCRETE TO BE 3,000 P.S.I. COMPRESSIVE STRENGTH IN 28 DAYS.
7. REINFORCING STEEL TO BE A.S.T.M. A-305 DEFORMED.
8. ALL CONSTRUCTION SURVEYING AND FIELD VERIFACATION OF ALL DIMENSIONS.
9. PROVIDE AND INSTALL ALL CONCRETE, REINFORCING STEEL, & ANCHOR BOLTS.
10. UNLOAD ALL TRUCK(S) DELIVERING C.F.P. MATERIALS.
11. ERECTION OF THE STRUCTURE(S).

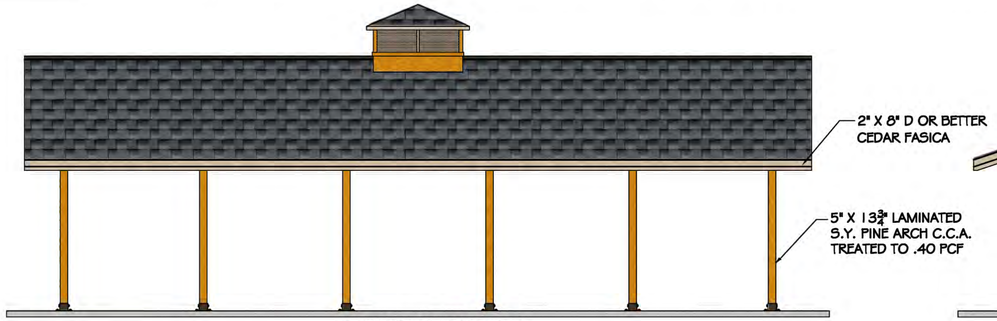

FRONT ELEVATION

SCALE: 1/4"=1'-0"

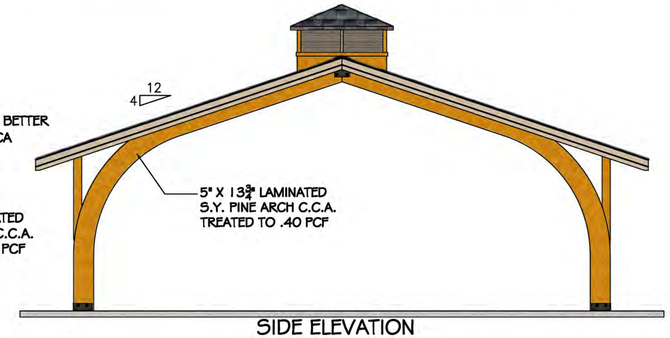

SIDE ELEVATION

SCALE: 1/4"=1'-0"

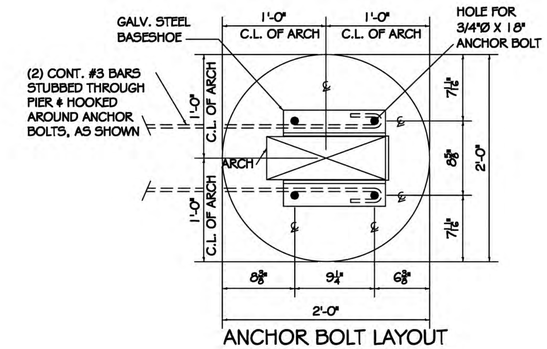

ANCHOR BOLT LAYOUT

SCALE: 1 1/2"=1'-0"

Colors:
Roof Shingles" Pewter Grey
Wood Framing: "Cedar" Semi-Transparent
Wood Trim: "White Birch" Semi-Opaque

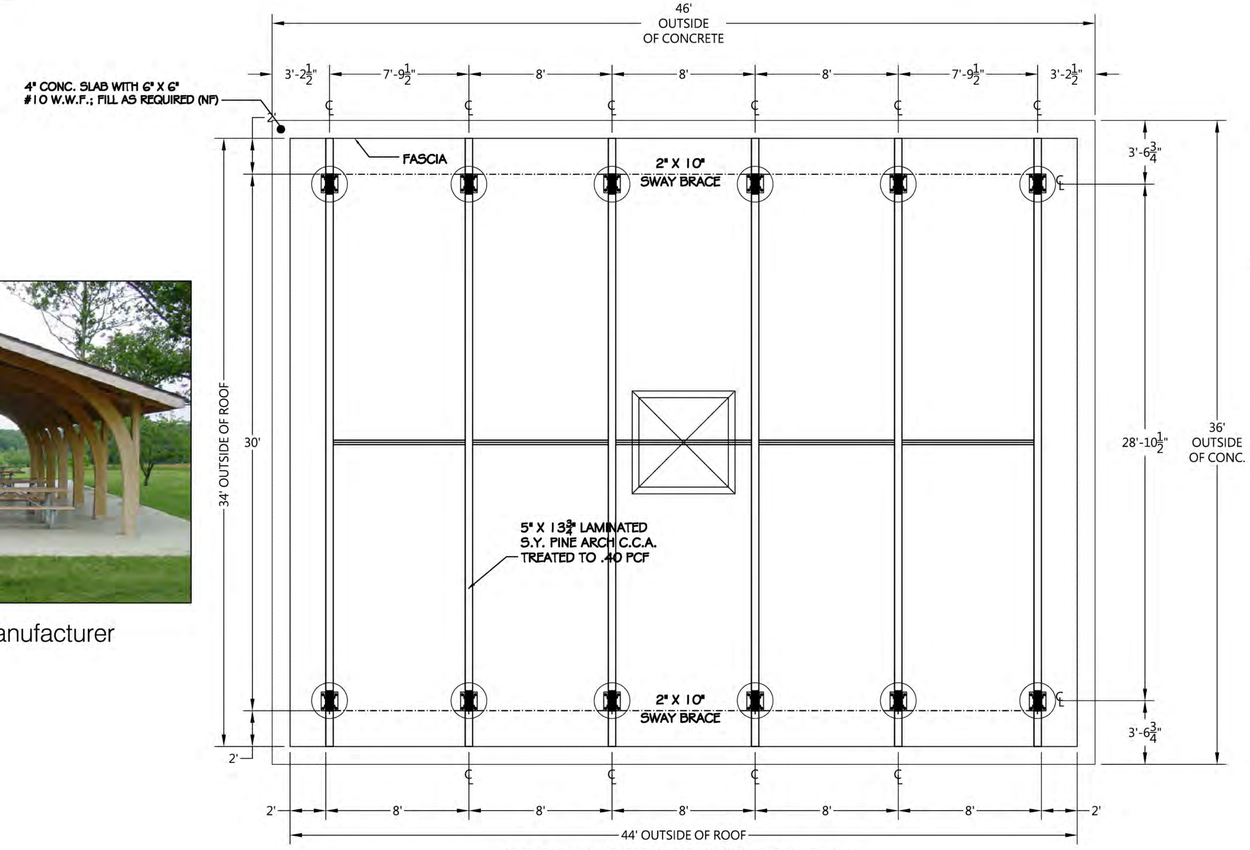

ROOF / FLOOR / FOUNDATION PLAN

SCALE: 1/4"=1'-0"

Precedent Image from Manufacturer

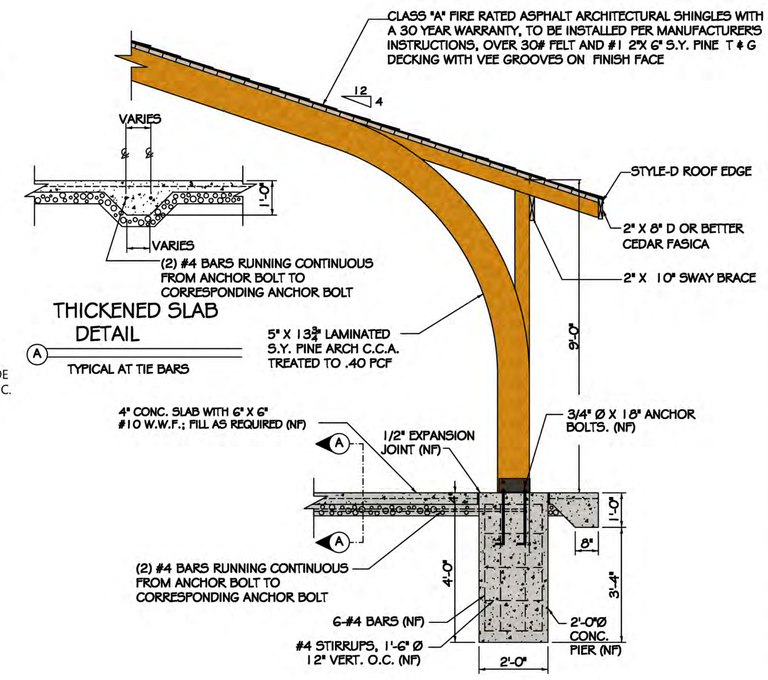

CROSS SECTION

CFP
CEDAR FOREST PRODUCTS CO.
1008 S. DIVISION - BOX 98
POLO, ILLINOIS 61064
(815)-946-3994
(815)-946-2479 FAX
WWW. CEDARFORESTPRODUCTS.COM

REVIEWED BY:	NF-DENOTES NOT FURNISHED BY CEDAR FOREST PRODUCTS		QTY-	GAP3444	REVISION DATES	DRAWN BY/DATE/JOB#
	DEALER NAME: CITY/STATE: SALESPERSON:		OWNER NAME: CITY/STATE/ZIP:		REV: REV: REV: REV:	

CBA | Landscape Architects LLC
24 THORNDIKE STREET | CAMBRIDGE MA 02141
phone 617.945.9760 | www.cbaland.com | cba@cbaland.com
landscape architecture
urban design
master planning

Improvements To Choate Park

Site Plan Submission

Architectural Plans: Pavilion

REVISIONS:		
1	09-22-17	P.B. Comments
2	11-07-17	Record Set
DATE:	08/17/2017	
SCALE:	AS NOTED	
FILE:	CHO-Pavilion.dwg	
DWN BY:	Manufacturer	
CKD BY:	DJC	
PROJ. # :	1612a	

L7.0

Area 1: 1"=40'

Luminaire Location Summary						
LumNo	Label	X	Y	Z	Orient	Tilt
1	L1	210623.25	877268.625	16	5.675	0
2	L1	210605.375	877234.375	16	5.675	0
3	L1	210626.25	877165	16	5.675	0
4	L1	210622	877097	16	5.675	0
5	L1	210633.875	877021.375	16	5.675	0
6	L1	210669.75	876963	16	5.675	0
7	L1	210702.375	876901.875	16	5.675	0
8	L1	210712.625	876827	16	5.675	0
9	L1	210711.25	876758.125	16	5.675	0
10	L1	210668.125	876755.5	16	5.675	0
11	L1	210617.25	876706.75	16	5.675	0
12	L1	210707	876688.875	16	5.675	0
13	L1	210620.625	876667.5	16	5.675	0
14	L1	210571	876659.625	16	5.675	0
15	L1hs	210712	876632.625	16	5.675	0
16	L1	210540.25	876619.5	16	5.675	0
17	L1	210583.625	876589.25	16	5.675	0
18	L1hs	210720.75	876570.5	16	5.675	0
19	L1	210525.75	876572.375	16	5.675	0
20	L1	210586.75	876529.25	16	5.675	0
21	L1	210515.5	876516.875	16	5.675	0
22	L1hs	210711.75	876512.25	16	5.675	0
23	L1	210316.75	876500.875	16	0	0
24	L1	210648.5	876495	16	5.675	0
25	L1	210581.375	876493.125	16	5.675	0
26	L1	210533.25	876448.375	16	5.675	0
27	L1hs	210723.75	876438.875	16	5.675	0
28	L1	210658.625	876435.875	16	5.675	0
29	L1	210592.875	876430.375	16	5.675	0
30	L1	210572.375	876393.625	16	5.675	0
31	L1	210274.875	876376.5	16	0	0
32	L1	210669	876375.25	16	5.675	0
33	L1	210610	876360.25	16	5.675	0
34	L1hs	210721.625	876353.875	16	5.675	0
35	L1	210659.125	876343.125	16	5.675	0
36	L1	210648.875	876296.875	16	5.675	0
37	L1	210468.875	876514.375	16	0	0
38	L1	210362.625	876500.75	16	0	0

Calculation Summary							
Label	CalcType	Units	Avg	Max	Min	Avg/Min	Max/Min
CalcPts_1	Illuminance	Fc	0.11	0.6	0.0	N.A.	N.A.

Outdoor Luminaire Schedule						
Symbol	Qty	Label	Description	Lum. Lumens	LLF	Filename
⊙	33	L1	90510_US_LITMS_PAT_LED_30K_V0	1805	0.900	90510_US_LITMS_PAT_LED_30K_V00 A032
⊙	5	L1hs	90510_US_LITMS_PAT_LED_30K_V0	1805	0.900	90510_US_LITMS_PAT_LED_30K_V00 A032

Notes:

1. Pedestrian Light Fixtures are to be HW Patina by Louis Poulsen Light Fixtures. Lumiares are to be 25w LED fixtures at a 3,000k color temperature.
2. Light poles are to be 14' Louis Poulsen 4.5" diameter poles.
3. Fixture color is to be black.

Photometrics Key:

Property Line

Match Line

Add Alternate

Electrical Line

HH Hand Hole

KEY PLAN

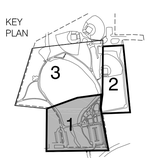

HW Patina LED

louis poulsen

Design: Louis Poulsen

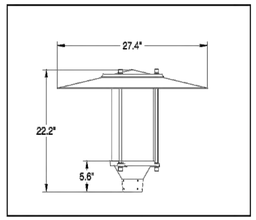

18000114539

Light source	Voltage	Weight	Electric shock protection	Ingress protection
26W LED/3000K **26W LED/4000K**	**120-277V**	**19 lbs**	**CI.**	**IP 44, Wet location**

Recommended cleaning substances:
Wipe off dust wiht a dry, soft cloth. Remove greasy spots etc. with a soft cloth dampened in lukewarm water (<122° F/ 50° C) with a mild detergent.

Warning: Scouring powder and similar substances will scratch surfaces.

All installation is subject to local code and jurisdiction.

Consult a qualified electrician to ensure correct branch circuit conductor.

The installer must ensure that the foundation is stable and can support the luminiare's weight.

Light Fixture

louis poulsen

POLE ROUND STRAIGHT

Design:
Louis Poulsen A/S

Finish:
Brushed aluminum. Black, graphite grey, grey, natural painted aluminum or white, powder coated.

Material:
Aluminum.

Mounting:
Base cover dimension: 14" diameter. Base plate: Mounted to a concrete base with 4 anchor bolts on a bolt circle of 8.0" diameter. Installation: Refer to mounting instruction download for installation details.

Weight:
Min: 25 lbs. Max: 35 lbs.

Light Pole

Light Pole with Fixture

0 10 20 40 60 80'

CBA | Landscape Architects LLC
24 THORNDIKE STREET | CAMBRIDGE MA 02141
phone 617.945.9760 | www.cbaland.com | cba@cbaland.com
landscape architecture
urban design
master planning

Improvments to Choate Park

Site Plan Submission

Lighting/Photometric Plan: Sheet 1

REVISIONS:		
1	09-22-17	P.B. Comments
2	11-7-17	Record Set
DATE:		08/17/2017
SCALE:		1" = 40' - 0"
FILE:		CHO-Photometrics.dwg
DWN BY:		AJK
CKD BY:		DJC
PROJ. # :		1612a

L8.0

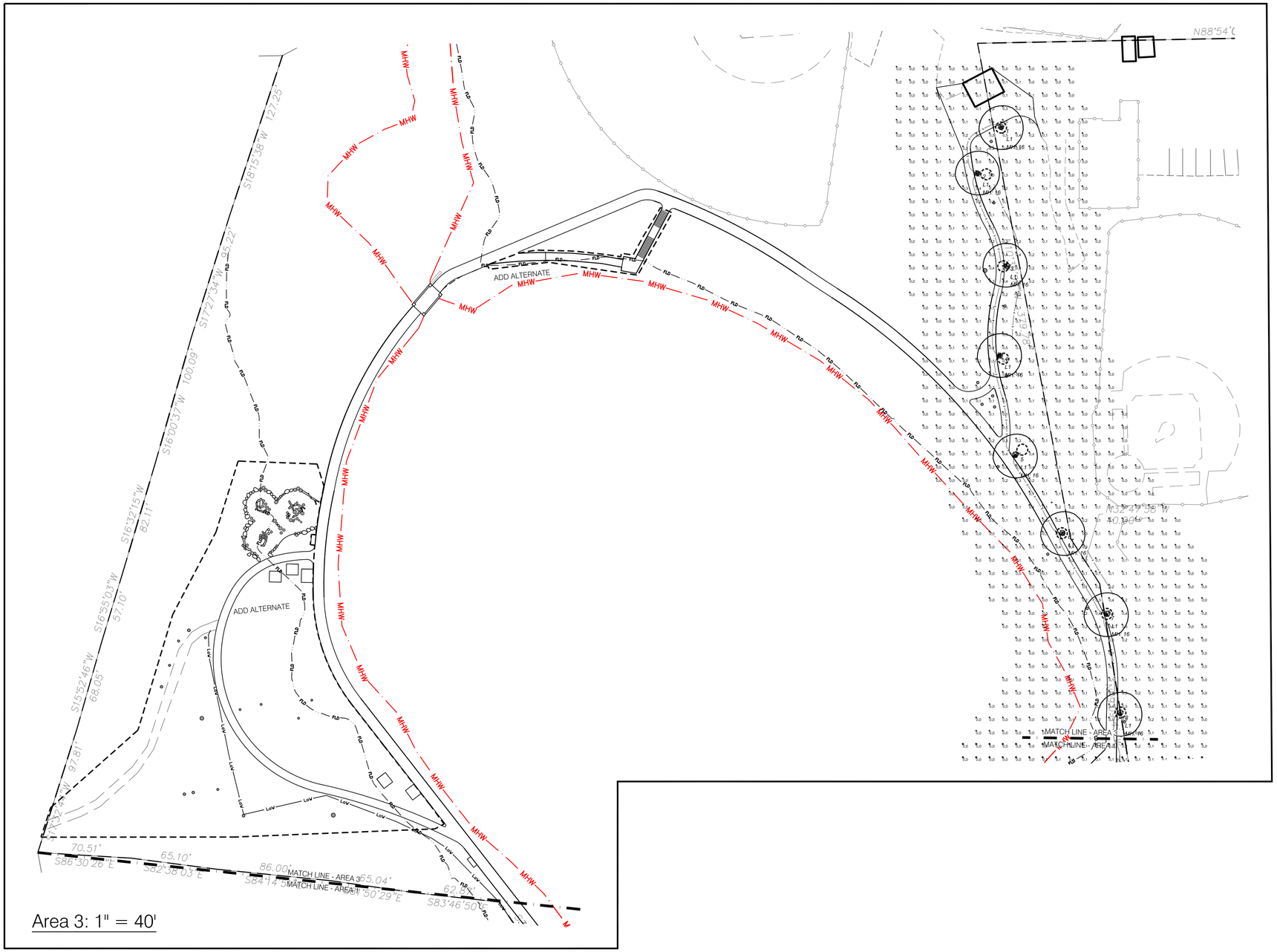

Area 3: 1" = 40'

Notes:

1. See Sheet L–8.0 for Fixtures, Notes, and Luminaire Information

Photometrics Key:

- Property Line
- Match Line
- Add Alternate
- Electrical Line
- HH Hand Hole

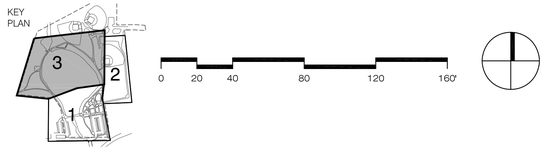

CBA | Landscape Architects LLC
24 THORNDIKE STREET I CAMBRIDGE MA 02141
phone 617.945.9760 I www.cbaland.com I cba@cbaland.com
landscape architecture
urban design
master planning

Improvments to Choate Park

Site Plan Submission

Lighting/Photometrics Plan: Sheet 2

REVISIONS:		
1	09-22-17	P.B. Comments
2	11-7-17	Record Set
DATE:	08/17/2017	
SCALE:	1" = 40' - 0"	
FILE:	CHO-Photometrics.dwg	
DWN BY:	AJK	
CKD BY:	DJC	
PROJ. # :	1612a	

L8.1

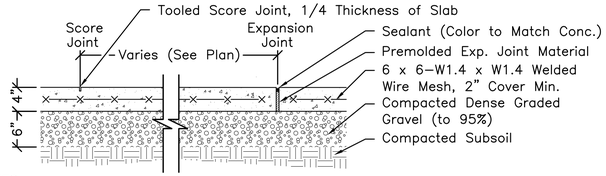

NOTES:
1. Score joints every 6' (maximum), both directions (see Plan). Expansion joints every 25' (maximum). Locate expansion joints where paving abuts structures, curbs, walls, or existing paving.
2. Concrete to be 4000 PSI (28 days), light broom finish. 4" steel trowel all edges.
3. All walks and plazas shall slope to drain (1.5% maximum cross slope). Coordinate with existing grades.

Concrete Paving
Scale: 1"=1'–0"

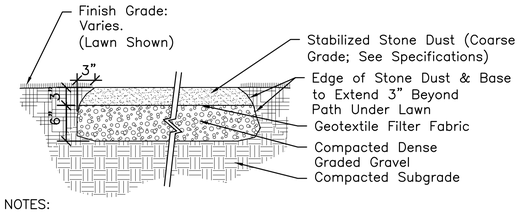

NOTES:
1. Stone Dust to meet adjacent Finish Grade smoothly.
2. See Specifications. Provide sample for approval.
3. Contractor to ensure stone dust and all equipment used are free of vegetative matter and seeds.

Stone Dust Paving
Scale: 1"=1'–0"

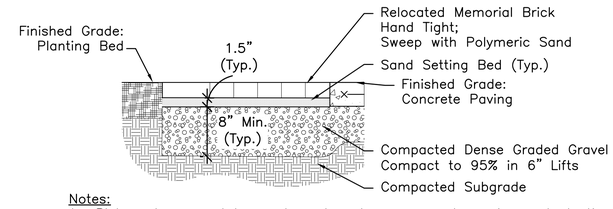

Notes:
1. Bicks set on sand to meet grades at new concrete paving and planting beds. Review with Landscape Architect before sweeping with polymeric sand.

Reset Memorial Pavers on Sand Setting Bed
Scale: 1" = 1'–0"

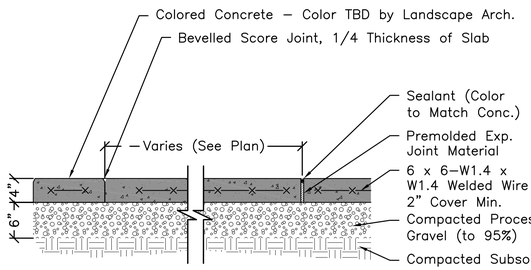

NOTES:
1. See Layout Plans for Scoring Pattern of Colored Concrete.
2. Colored Concrete to be made with CHROMIX Admixtures and cured with LITHOCHROME Colorwax by SCOFIELD. (PH: 1–800–800–9900). Apply per manufacturer's directions. Colors to be selected by Landscape Architect. Provide 4'x4' sample of each color for approval by Landscape Architect and Architect.
3. For concrete installation & specifications, match non–colored concrete detail 1/L6.1.

Colored Concrete Paving
Scale: 1"=1'–0"

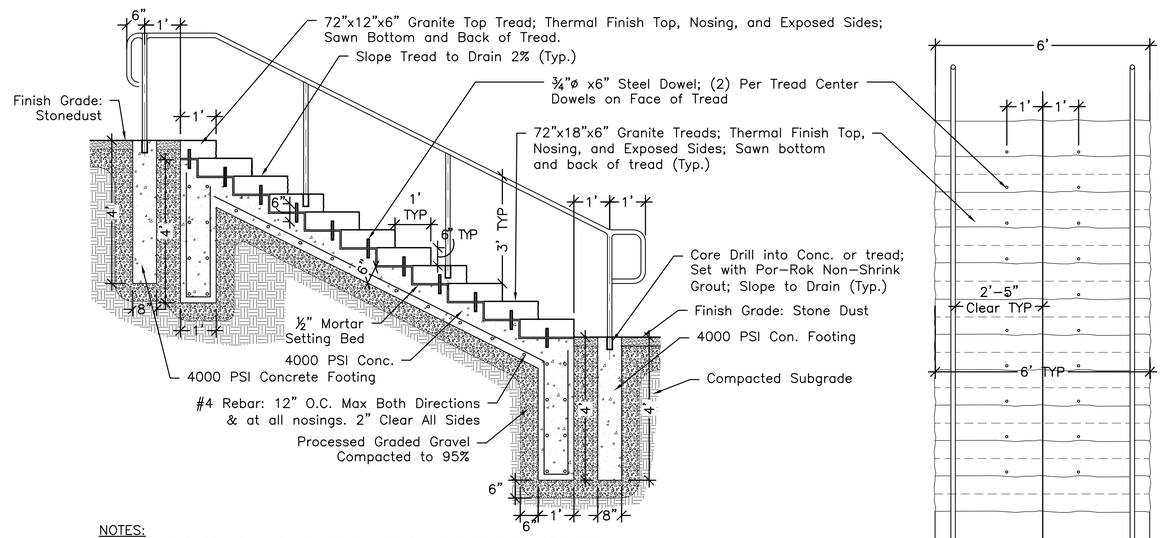

NOTES:
1. RAILING SHOP DRAWINGS BASED ON FIELD MEASUREMENTS REQUIRED.
2. All posts to be plumb.
3. All steel to be color galvanized Black; See Specs.
4. All welds to be full welds. Grind smooth all edges.
5. Granite to be "Woodbury Grey" by Swenson Granite, or Approved Equal. See Specs.

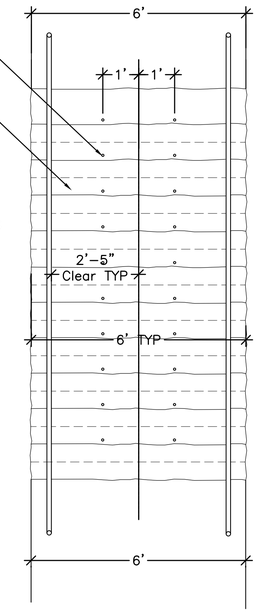

11 Riser Granite Steps with Handrails
Scale: ½" = 1'–0"

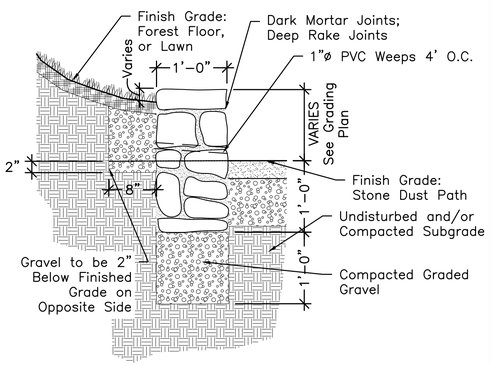

NOTES:
1. Supply sample of stone for approval. Landscape Architect to approve sample section of wall before constuction proceeds.

Low Fieldstone Retaining Wall
Scale: 1" = 1'–0"

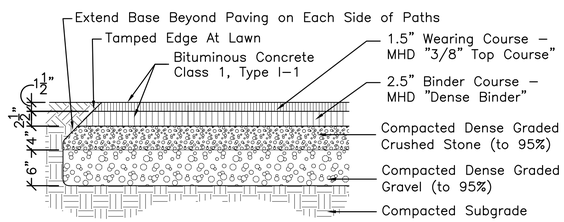

Bit. Conc. Paving (Parking & Drives)
Scale: 1" = 1'–0"

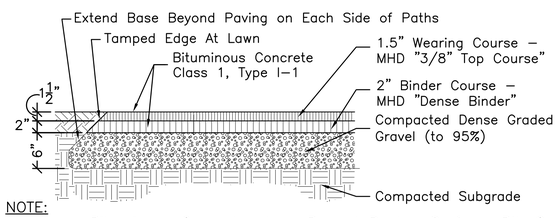

NOTE:
1. Where Bituminous Concrete abuts Poured Rubber Surface, Bit. Conc. shall be installed with a curved aluminium asphalt restraint; see Rubber Safety Surface detail (1/L6.7) for information, detail, and requirements.

Bituminous Concrete – Pathways
Scale: 1" = 1'–0"

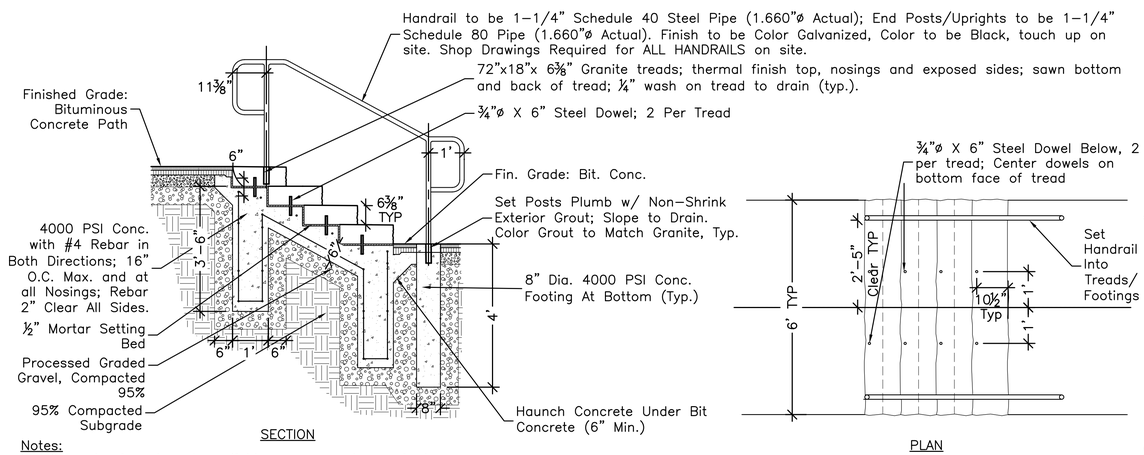

Notes:
1. Shop drawings based on field measurements required.
2. Granite to be "Woodbury Grey" by Swenson Granite or Approved Equal (See Specs).

Granite Steps with Handrails
1/2"=1'–0"

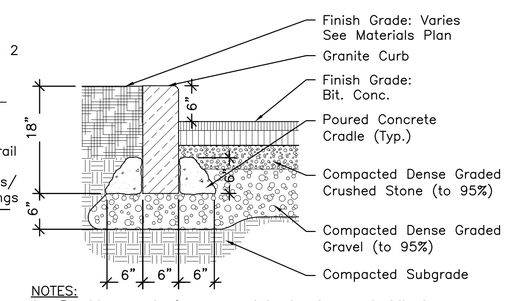

NOTES:
1. Provide sample for approval by Landscape Architect.

Granite Curb
Scale: 1" = 1'–0"

FOR PERMIT ONLY

CBA | Landscape Architects LLC
24 THORNDIKE STREET I CAMBRIDGE MA 02141
phone 617.945.9760 I www.cbaland.com I cba@cbaland.com
landscape architecture
urban design
master planning

Improvements to Choate Park
Site Plan Submission
Details

REVISIONS:		
1	09-22-17	P.B. Comments
2	11-7-17	Record Set
DATE:	08/17/2017	
SCALE:	AS NOTED	
FILE:	CHO-Details.dwg	
DWN BY:	AJK	
CKD BY:	DJC	
PROJ. # :	1612a	

L9.0

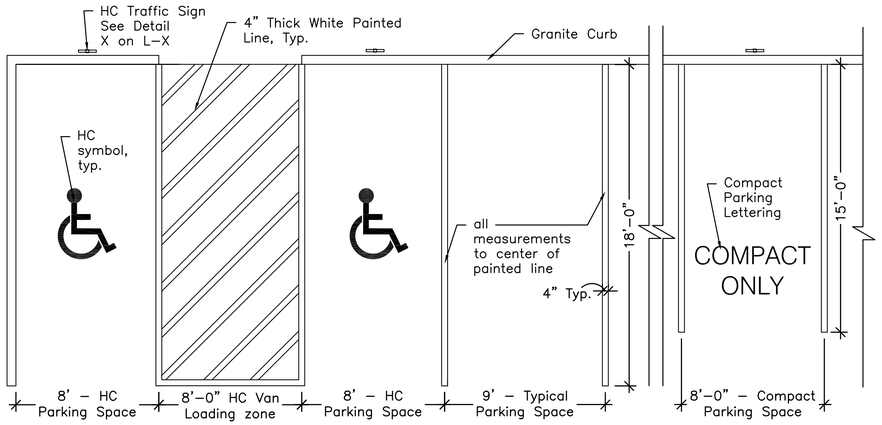

Notes:
1. All handicap parking shall be in conformance with the rules and regulations of the American's with Disabilities Act (ADA) and the Mass. Architectural Access Board (AAB).
2. All Striping to be 4" wide painted white. refer to layout and materials plan for location of all pavement markings.

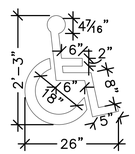

HC SYMBOL:
Not To Scale

Parking Striping Layout
Scale: ¼" = 1'–0"

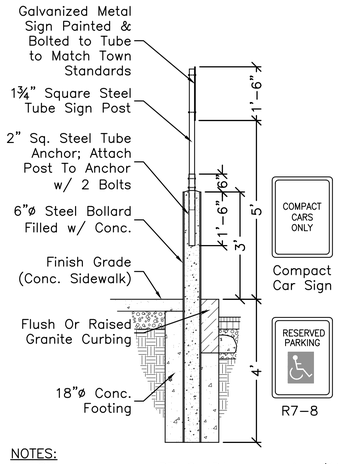

NOTES:
1. Sign to be type R7–8 ADA space sign (18" x 12") , or Compact Car parking sign (18" x 12") and to conform with the Manual on Uniform Traffic Control Devices (latest edition), and Town standards.
2. Post & Anchor to be color galvanized black. Bollard to be Color Galvanized; color to be selected w/ DPS.

Parking Sign In Bollard At Curb
Scale ½" = 1'–0"

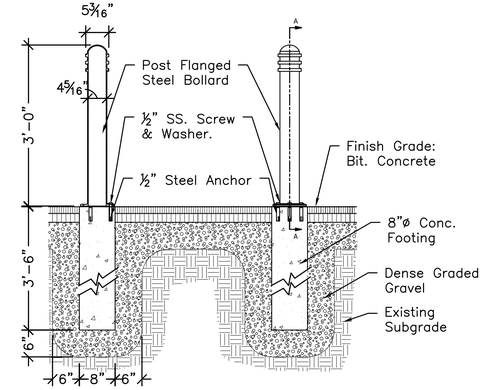

NOTES:
1. Bollard to be Model # R–7901 Reliance Foundry "Surface Mount" bollard by Reliance Foundry Inc. Unit 207 148 Street, Surrey, BC V3S 7G7. 1–888–735–5680. Info@reliance–foundry.com, or Approved Equal.
2. Bollard Color to be Black.
3. Follow all Manufacturer's installation instructions.

Bollard
Scale: ¾" = 1'–0"

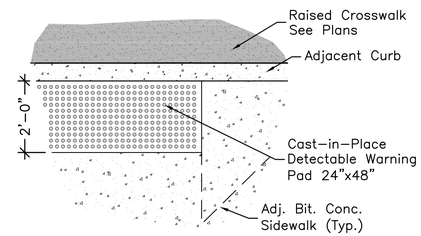

NOTES:
1. All Pads to be Federal Color #20109, Submit Sample for approval.
2. Detectable Warning Pads in permanent sidewalks to be set atop 4" concrete slab, cast into place per manufacturer's instructions.
3. Install new Curb Ramps and Tactile Warning Panels on both sides driveway. Crosswalk striping per MUTCD standards for painted asphalt raised crosswalks.

Detectable Warning Panel
Scale: ½" = 1'–0"

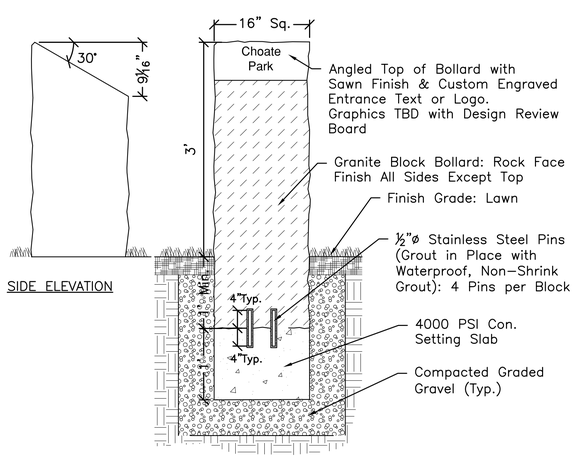

NOTES:
1. SHOP DRAWINGS REQUIRED.
2. Graphics for Signs to be custom engraved on angled sign face by granite fabricator, Graphics for each sign (2 total) to be provided by the Landscape Architect in production–ready digital format.
3. Granite to be Woodbury Grey from Swenson Granite or approved equal.

Entry Bollard
Scale: 1"=1'–0"

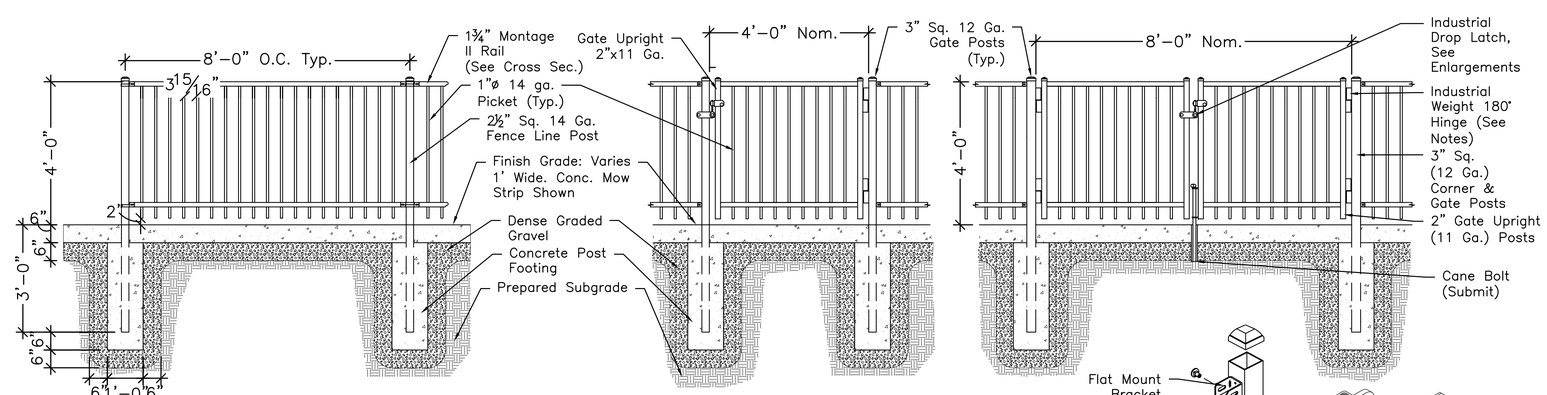

NOTES:
1. SHOP DRAWINGS REQUIRED.
2. Fence, Gates, and Hardware shall be "Montage II Majestic 2 Rail" by AmeriStar Fence or Approved Equal. Install according to manufacturer's instructions.
3. Gate is to have a self–closing, lockable industrial drop latch with minimal projections, operable from both sides of fence, Omega II Standard Latch, Single: C–20LP3/C–20LC2, Double: C–20LP2/C–20LC2, by Omega II Fence Systems of Laval, QC or Appr. Eq.
4. Through–Bolt Latch through posts & frame, or weld in place; clamped attachment will not be accepted.
5. Hinges to be MHH–180 Hinges or Approved Equal industrial weight 180° hinges. Gates to open into playground.
6. All steel members coated with zinc rich epoxy then finished with black polyester powder coating. Submit full manufacturer's info for all accessories.
7. All cut ends MUST be treated with zinc galvanizing compound per manufacturer's instructions.

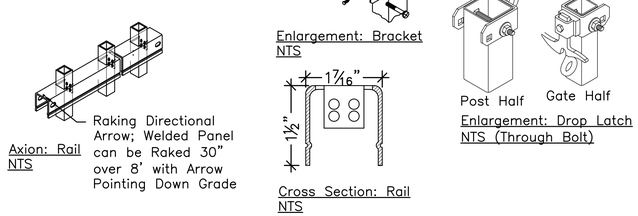

4' Ht. Fence & Gate
Scale: ½" = 1'–0"

FOR PERMIT ONLY

CBA | Landscape Architects LLC
24 THORNDIKE STREET I CAMBRIDGE MA 02141
phone 617.945.9760 I www.cbaland.com I cba@cbaland.com
landscape architecture
urban design
master planning

Improvements to Choate Park
Site Plan Submission
Details

REVISIONS:		
1	09-22-17	P.B. Comments
2	11-7-17	Record Set
DATE:	08/17/2017	
SCALE:	AS NOTED	
FILE:	CHO-Details.dwg	
DWN BY:	AJK	
CKD BY:	CCB	
PROJ. # :	1612a	

L9.1

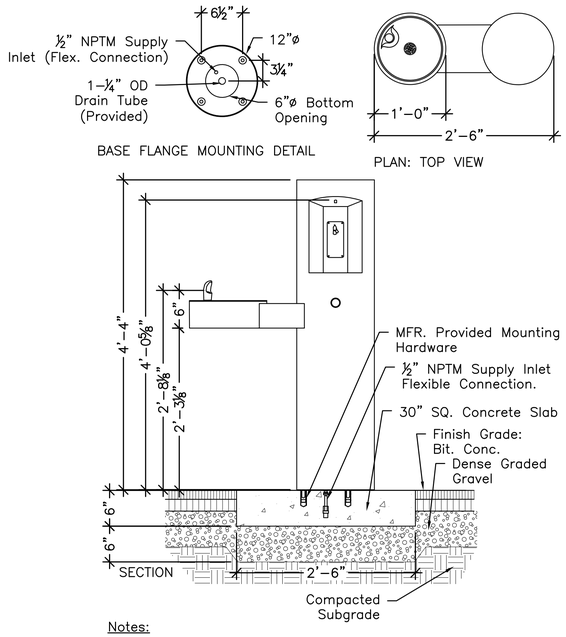

Notes:

1. Drinking Fountain is to be Model GYM74–MO by Murdock Manufacturing Inc. of City of Industry CA.
2. Drinking fountain is to have a Stainless Steel Finish.
3. SHOP DRAWINGS REQUIRED.
4. Contractor to follow all Manufacturer's installation instructions and specifications.

Drinking Fountain

Scale: 1" = 1'–0"

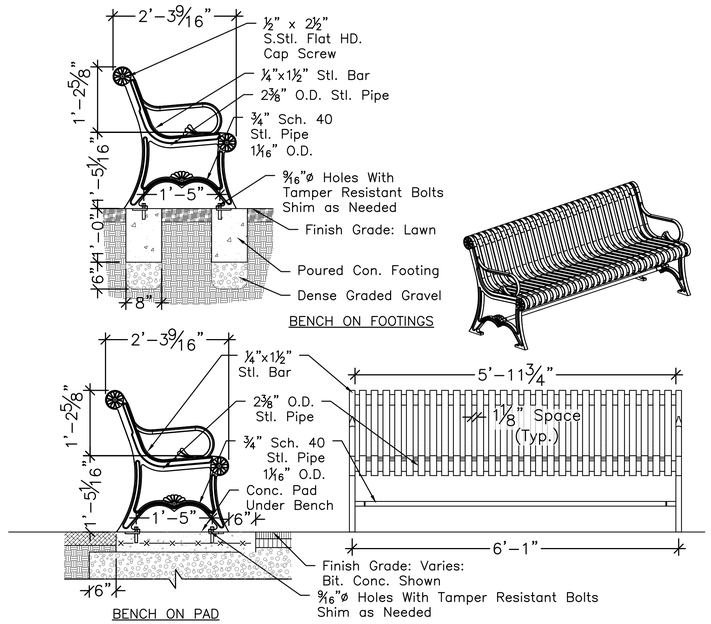

Notes:

1. Benches are to be furnished by Owner. Contractor is responsible for assembly and installation.
2. Benches are to be Model #58–60/S2 Surface Mount by DuMor, Inc.
3. Installation to be completed in Accordance with Manufacturer's Specifications.
4. Contractor to touch up all damage to finishes with manufacturer's provided touch up kit.

6' Bench With Back (FBO)

SCALE: 3/4" = 1'–0"

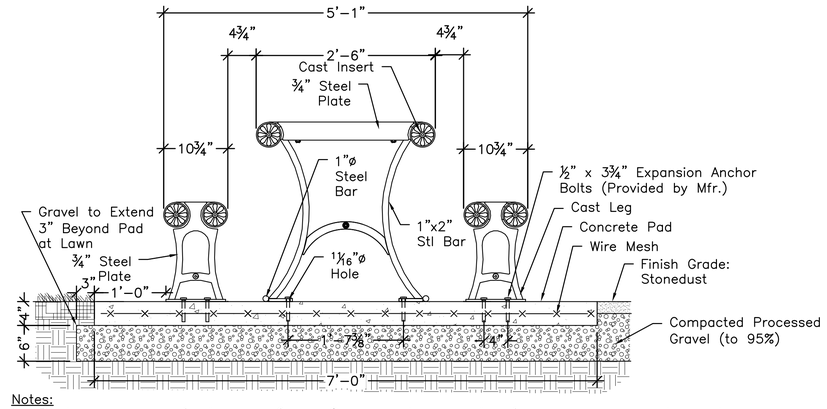

Notes:

1. Picnic tables to be furnished by Owner. Contractor is responsible for all assembly and installation.
2. 6' Long Picnic Tables to be DuMor Model 6A–019/S–2 & 8' ADA Picnic Tables to be DuMor Model 6A–019–068–1/S2.
3. Installation to be completed in accordance with Manufacturer's Specifications.
4. Contractor to touch up all damage to finished with manufacturer's provided touch up paint.

Steel Strap Picnic Table on Concrete Pad (FBO)

Scale: 1" = 1'–0"

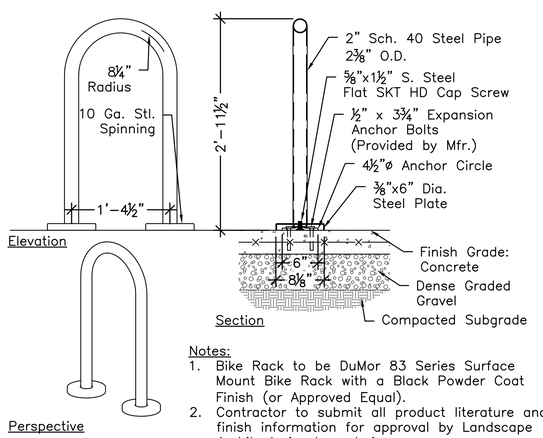

Notes:

1. Bike Rack to be DuMor 83 Series Surface Mount Bike Rack with a Black Powder Coat Finish (or Approved Equal).
2. Contractor to submit all product literature and finish information for approval by Landscape Architectprior to ordering.
3. Contractor to follow all Manufacturer's installation instructions.
4. All Steel members are to be coated with a Zinc Richy epoxy and then finished with polyester powder coating.

Surface Mount Bike Rack

Scale: 1" = 1'–0"

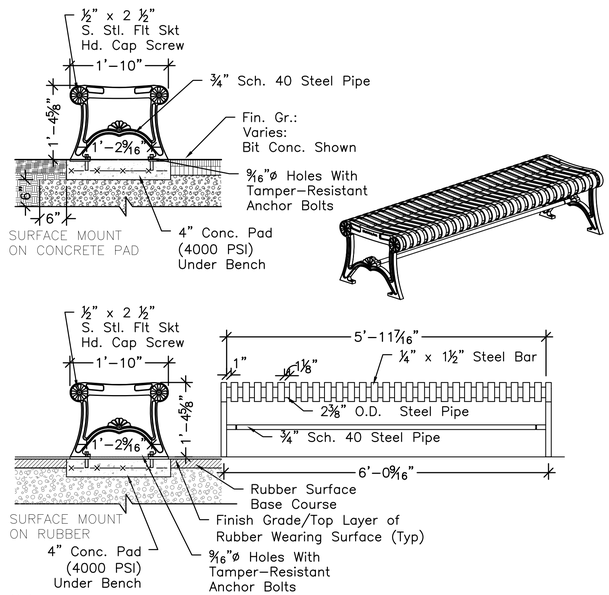

Notes:

1. Benches to be furnished by Owner. Contractor responsible for assembly and installation.
2. Backless benches to be DuMor Model #92–60/S2 surface mount.
3. Installation to be completed in accordance with Manufacturer's Specifications.
4. Contractor to touch up all damage to finished with manufacturer's provided touch up kit.
5. Set benches directly on pad. Do not bolt bench through rubber. Shim to make level.

6' Backless Bench (FBO)

SCALE: 3/4" = 1'–0"

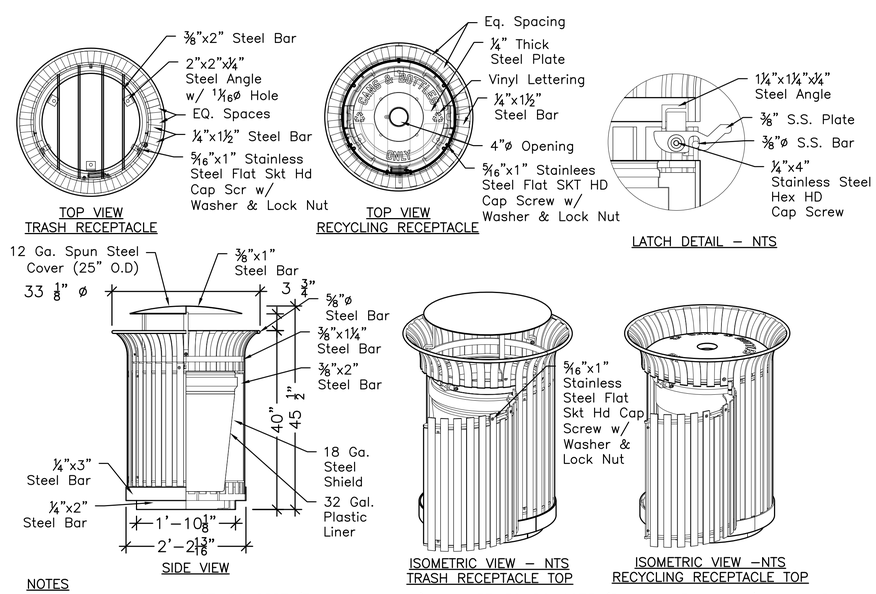

NOTES

1. Receptacle to be 157–32–25BT (Trash Receptacle) and 157–32–RC–0075 (Recycling Receptacle) by the DuMor Inc., P.O. Box 142 Mifflintown, PA 17059–0142, or Approved Equal.
2. Installation to be Completed in Accordance with Manufacturer's Specifications.
3. All Steel Members Coated w/ Zinc Rich Epoxy then Finished w/ Polyester Powder Coating. Color to be black for trash and blue for recycling.
4. ½" x 3 ¾" Expansion Anchor Bolts To Be Provided by Manufacturer.

Trash or Recycling Receptacle

Scale: 3/4" = 1'–0"

FOR PERMIT ONLY

CBA | Landscape Architects LLC
24 THORNDIKE STREET I CAMBRIDGE MA 02141
phone 617.945.9760 I www.cbaland.com I cba@cbaland.com
landscape architecture
urban design
master planning

Improvements to Choate Park

Site Plan Submission

Details

REVISIONS:		
1	09-22-17	P.B. Comments
2	11-7-17	Record Set
DATE:	08/17/2017	
SCALE:	AS NOTED	
FILE:	CHO-Details.dwg	
DWN BY:	AJK	
CKD BY:	CCB	
PROJ. # :	1612a	

L9.2

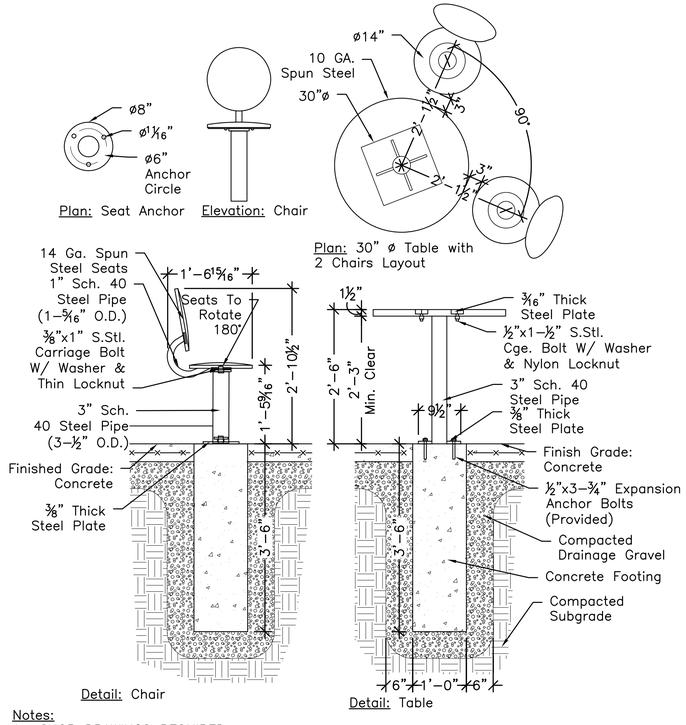

Notes:
1. SHOP DRAWINGS REQUIRED.
2. Tables are by DuMor Site Furnishings Inc., Table Model Number: 68-537-02. Chair Model Number: 69-403-01. Powdercoat colors to be selected by Landscape Architect prior to ordering.
3. Ease all corners of seating surface to rounded (1/8" Min. Radius).

Circular Table & Swivel Chairs

Scale: 3/4" = 1'-0"

Notes:
1. Existing Bulletin Boards at the existing playground to be removed and reinstalled. See Materials Plan for locations.
2. Bulletin Boards are to be reinstalled in the same manner as they are currently installed.

Relocated Bulletin Boards

Scale: 1/2" = 1'-0"

Notes:
1. Existing Little Free Library at existing playground to be removed and reinstalled. See Materials Plan for location.
2. Little Free Library to be reinstalled in the same manner as it is currently installed.

Relocated Little Free Library

Scale: 1/2" = 1'-0"

Notes:
1. Existing boulder to be removed and reinstalled, see Materials Plan for location.
2. Boulder to be reinstalled in the same manner as it is currently installed.

Relocated Dedication Boulder

Scale: 1/2" = 1'-0"

Notes:
1. Existing Memorial Bench to be removed and reinstalled, see materials plan for location.
2. Bench to be reinstalled in the same manner as it is currently installed.

Relocated Memorial Bench

Scale: 1/2" = 1'-0"

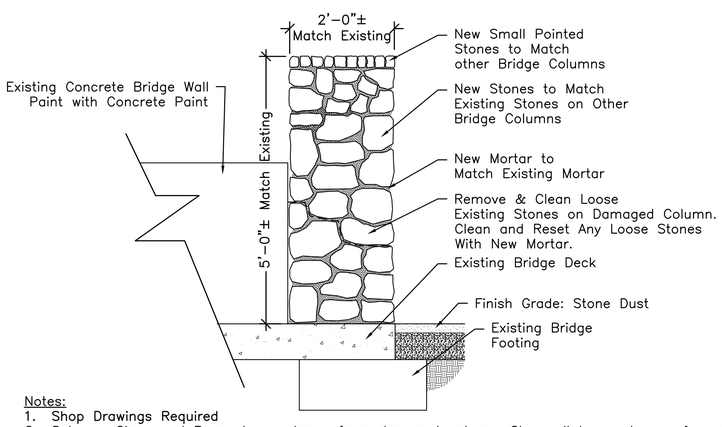

Notes:
1. Shop Drawings Required
2. Salvage, Clean and Reuse loose stones from damaged column. Clean all loose stones of mortar and other debris prior to rebuilding.
3. New stones to match adjacent bridge columns in size, form, and color. Contractor to submit sample of new stones for approval by Landscape Architect.
4. New mortar to match existing mortar on adjacent columns. Contractor to submit mortar sample for approval by Landscape Architect.
5. Contractor to submit product literature and full range of colors for concrete paint. See specifications.

Rebuild Existing Stone Column at Bridge

Scale: 3/4" = 1'-0"

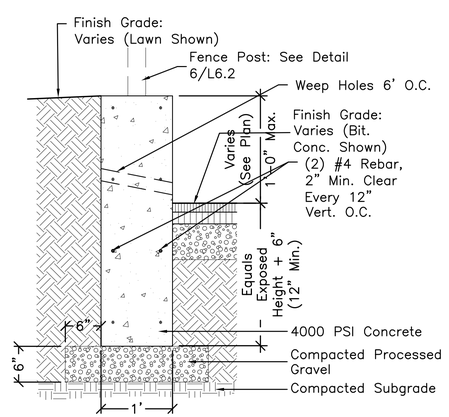

NOTES:
1. Score joints to be centered between posts. Locate expansion joints where edging abuts structures, walls, or other paving.
2. Concrete to be 4000 PSI (28 days) with light broom finish on top surface. Rubbed finish on exposed sides.

Thickened Concrete Mow Strip

Scale: 1" = 1'-0"

Notes:
1. Existing entrance sign to be removed and reinstalled, see Materials Plan for location.
2. Entrance Sign to be reinstalled in the same manner as it is currently installed.

Relocated Entrance Sign

Scale: 1/2" = 1'-0"

FOR PERMIT ONLY

CBA | Landscape Architects LLC
24 THORNDIKE STREET | CAMBRIDGE MA 02141
phone 617.945.9760 | www.cbaland.com | cba@cbaland.com
landscape architecture
urban design
master planning

Improvements to Choate Park

Site Plan Submission

Details

REVISIONS:		
1	09-22-17	P.B. Comments
2	11-7-17	Record Set
DATE:	08/17/2017	
SCALE:	AS NOTED	
FILE:	CHO-Details.dwg	
DWN BY:	AJK	
CKD BY:	DJC	
PROJ. # :	1612a	

L9.3

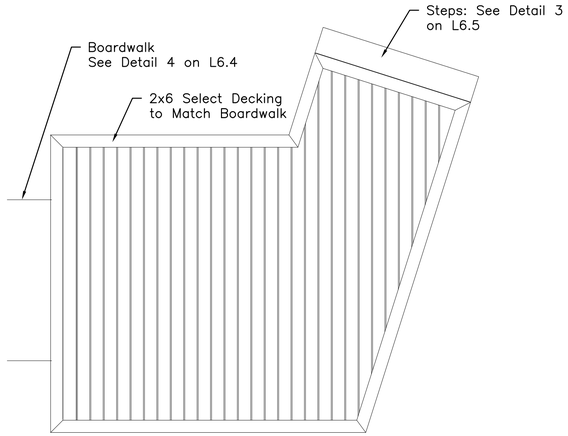

DECKING PLAN
Scale: ⅜"=1'–0"

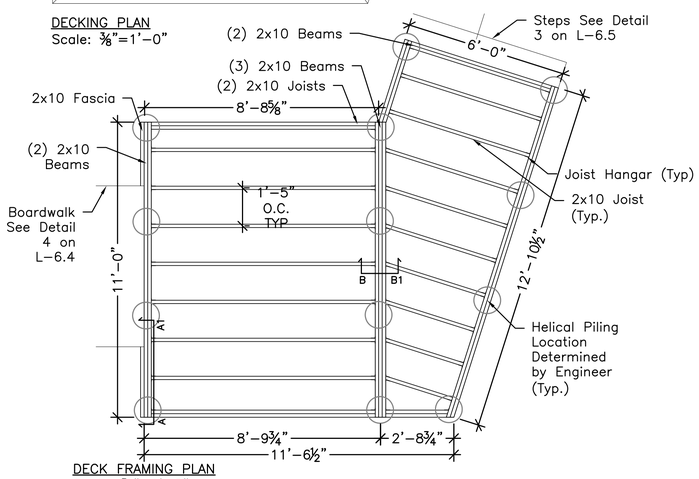

DECK FRAMING PLAN
Scale: ⅜"=1'–0"

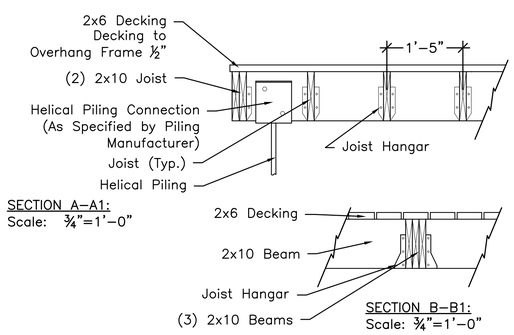

SECTION A–A1:
Scale: ¾"=1'–0"

SECTION B–B1:
Scale: ¾"=1'–0"

NOTES:

1. "Select Decking" members shall be HDPE Recycled Plastic Lumber with at least 85% recycled content, "Select" by Bedford Technology, 2424 Armour Road, PO Box 609, Worthington, MN 56187–0609, Phone (507) 372–5558, or Approved Equal. Decking to have Simulated Wood Grain Top Surface.
2. 2x10 Joists and Beams are to be pressure treated lumber. Contractor to submit product literature for approval by Landscape Architect.
3. Color for all HDPE members to be "Mink" by Bedford Tech, or approved equal.
4. Helical Pilings to be by AB Chance, Support Works, or approved equal. Submit product literature, piling details, and piling plan for approval by Landscape Architect. Piling details and layout plan to be stamped by a MA Licensed Structural Engineer.
5. For Railings See Detail 2 on L–6.5.
6. Assume 3,000 PSF soil bearing capacity for helical pier design calculations, to be confirmed.

Large Wooden Deck (Add Alternate #2)

Scale: ⅜" = 1'–0"

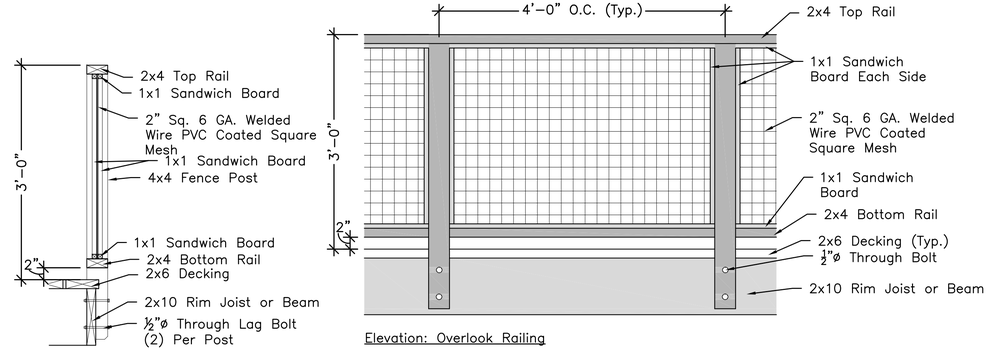

Section: Overlook Railing

Elevation: Overlook Railing

Notes:
1. All wood Members to be Western Red Cedar or Redwood.
2. Shop drawings Required. Shop drawings to be reviewed and stamped by a MA Licensed Structural Engineer.

Overlook Railing

Scale: 1" = 1'–0"

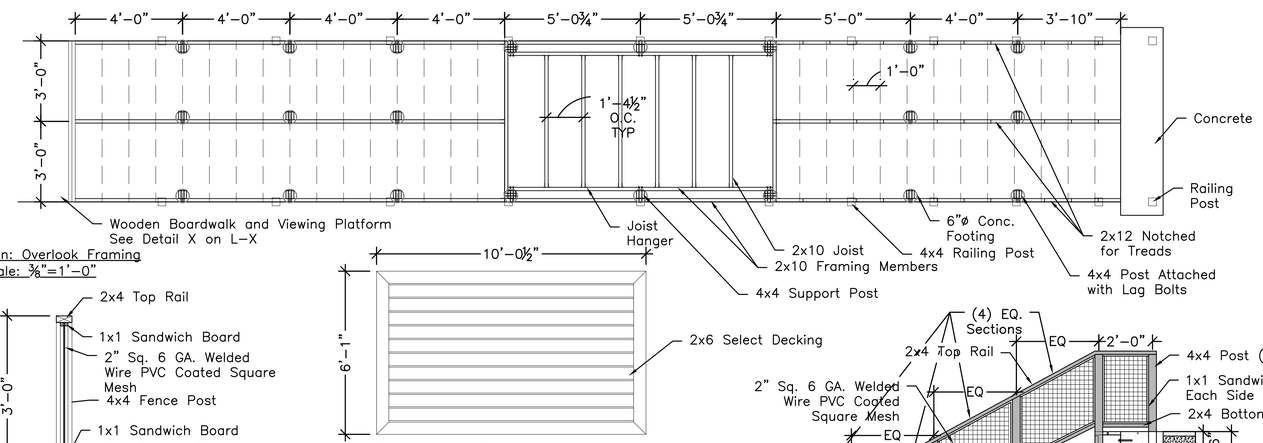

Plan: Overlook Framing
Scale: ⅜"=1'–0"

Plan: Landing Decking
Scale: ⅜"=1'–0"

Section: Railing
Scale: ¾"=1'–0"

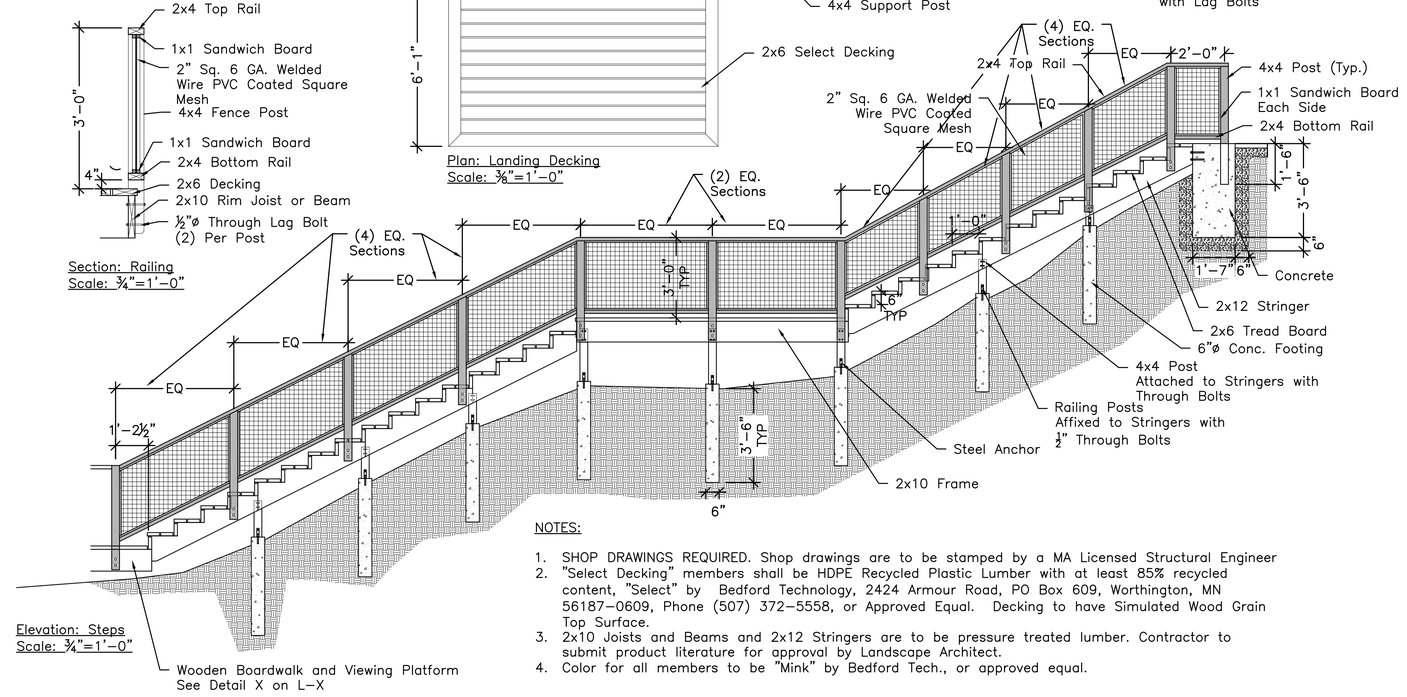

Elevation: Steps
Scale: ¾"=1'–0"

NOTES:

1. SHOP DRAWINGS REQUIRED. Shop drawings are to be stamped by a MA Licensed Structural Engineer
2. "Select Decking" members shall be HDPE Recycled Plastic Lumber with at least 85% recycled content, "Select" by Bedford Technology, 2424 Armour Road, PO Box 609, Worthington, MN 56187–0609, Phone (507) 372–5558, or Approved Equal. Decking to have Simulated Wood Grain Top Surface.
3. 2x10 Joists and Beams and 2x12 Stringers are to be pressure treated lumber. Contractor to submit product literature for approval by Landscape Architect.
4. Color for all members to be "Mink" by Bedford Tech., or approved equal.

Wooden Steps with Landing (Add Alternate)

Scale: ⅜" = 1'–0"

FOR PERMIT ONLY

CBA | Landscape Architects LLC
24 THORNDIKE STREET I CAMBRIDGE MA 02141
phone 617.945.9760 I www.cbaland.com I cba@cbaland.com
landscape architecture
urban design
master planning

CHOATE PARK - CASSIDY FIELD

Medway, MA

Details

REVISIONS:

1	09-22-17	P.B. Comments
2	11-7-17	Record Set

DATE:	08/17/2017
SCALE:	AS NOTED
FILE:	CHO-Details.dwg
DWN BY:	AJK
CKD BY:	CCB
PROJ. # :	1612a

L9.4

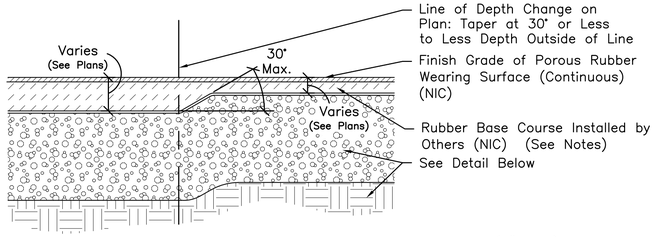

RUBBER SURFACE DEPTH CHANGE

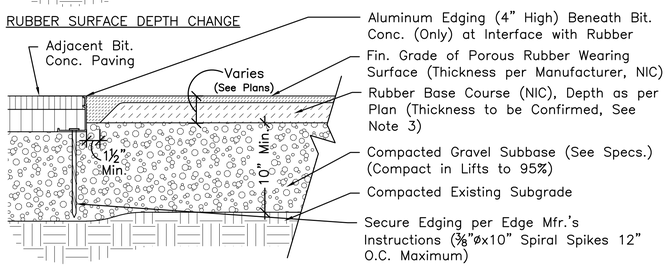

RUBBER SURFACE CONSTRUCTION AND EDGE CONDITIONS

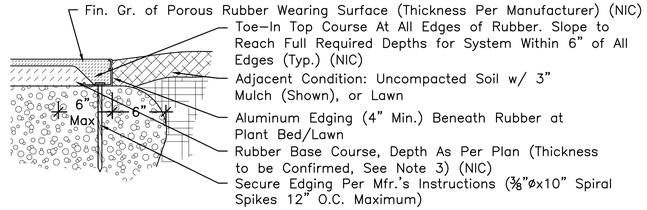

EDGE CONDITION AT LAWN/PLANT BED

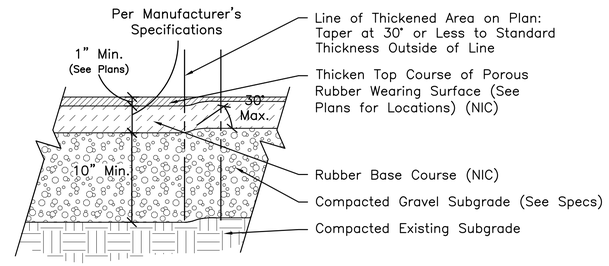

THICKENED TOP COURSE OF RUBBER SAFETY SURFACE AT HIGH WEARING AREAS

NOTES:

1. Surfacing to be installed by others; contractor is responsible for installation of finely graded compacted subbase installed per specifications and edging installation only. Contractor to provide compaction test results before delivering the subbase to rubber installer for rubber installation.
2. Rubber Safety Surface to be Playbound Poured-In-Place by Surface America conforming with ASTM 1292 per note 3, and ASTM 1951, purchased by Owner and installed by others.
3. Total Surface Depths indicated on plans are projected thicknesses based on proposed surfacing supplier and play equipment. L.A. to verify that critical height of surface at depth to be installed meets ASTM 1292 and all other applicable standards for all fall heights of play equipment as installed. The Compacted Gravel Subbase is to be considered a "Hard Base" when determining the required thicknesses.
4. Aluminum Edge Restraints shall be a 3/16" thick, L-shaped curvable aluminum edging system designed for use with bituminous concrete pavements, available in a range of sizes from 1" to 4" high from a single manufacturer, with black finish, "Asphalt Edge" by PermaLoc Aluminum Edging (www.permaloc.com) or Approved Equal. Install according to manufacturer's instructions and as shown in Drawing. Landscape Architect shall inspect all edging in place before installation of bituminous concrete and rubber surfaces.
5. See 32 18 16 for playground gravel subbase requirements.

Poured-In-Place Rubber Safety Surface Subbase and Edges (Rubber Furnished & Installed by Others)

Scale: 1-½" = 1'-0"

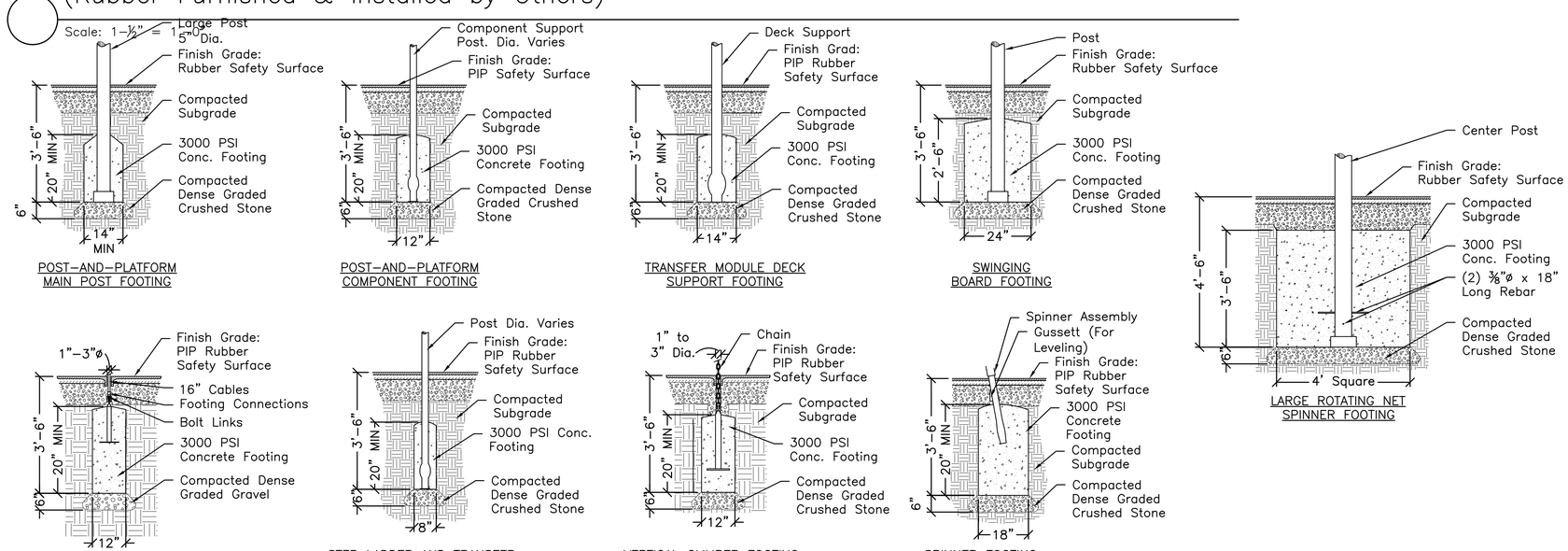

NOTES:

1. SHOP DRAWINGS OF PLAY EQUIPMENT AND POST/FOOTING PLANS REQUIRED.
2. Play equipment's safety zones to only include safety surfaces specified. Play equipment to be installed so safety zones do NOT overlap with walls, stairs, manholes, curbs, concrete paving, bituminous concrete paving, etc.
3. Footing sizes vary; dimensions shown are minimums. Provide the GREATER of the diameter indicated on the supplier's Footing Schedule OR the size above (footings may be larger/deeper than required by supplier).
4. Play equipment colors to be as shown in renderings.

Play Structure Footings

Scale: 1/2" = 1'-0"

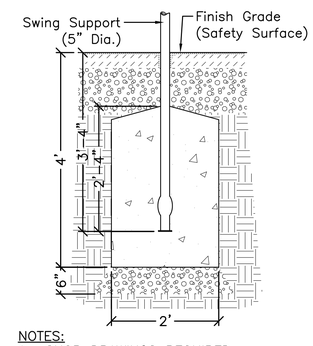

NOTES:

1. SHOP DRAWINGS REQUIRED.
2. Play equipment's safety zones to only include safety surfaces specified. Play equipment to be installed so safety zones do NOT overlap with walls, manholes, curbs, paving, etc.
3. Colors to be as shown in renderings.

Swing Posts

Scale: 3/4" = 1'-0"

FOR PERMIT ONLY

CBA | Landscape Architects LLC
24 THORNDIKE STREET I CAMBRIDGE MA 02141
phone 617.945.9760 I www.cbaland.com I cba@cbaland.com
landscape architecture
urban design
master planning

Improvements to Choate Park

Site Plan Submission

Details

REVISIONS:		
1	09-22-17	P.B. Comments
2	11-7-17	Record Set
DATE:	08/17/2017	
SCALE:	AS NOTED	
FILE:	CHO-Details.dwg	
DWN BY:	AJK	
CKD BY:	DJC	
PROJ. # :	1612a	

L9.6

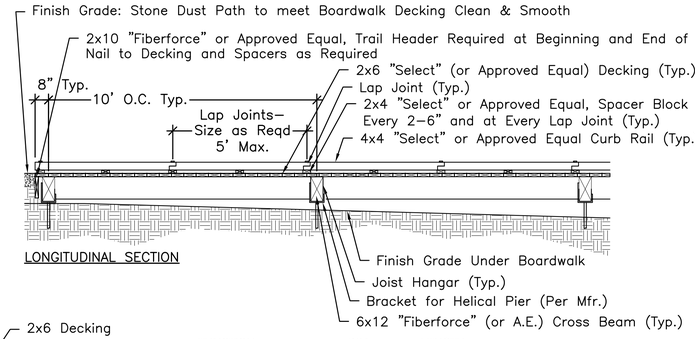

LONGITUDINAL SECTION

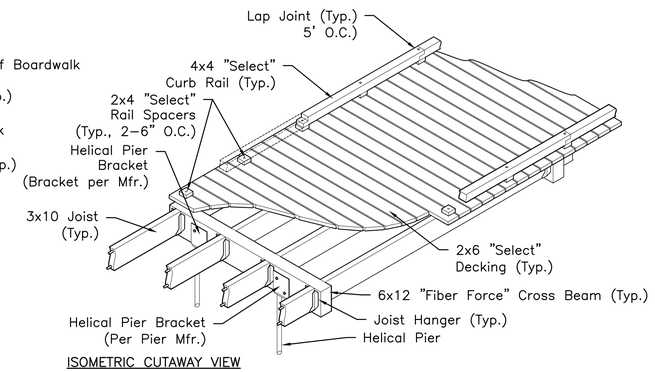

ISOMETRIC CUTAWAY VIEW

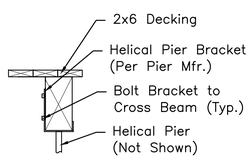

BRACKET WITH HELICAL PIER FOUNDATION
Scale: ¾"=1'–0"

FUNCTION	DIM.	LENGTH
CURB RAIL	4"X4"	5'–0"±
SPACER BLOCK	2"X4"	4"
DECKING	2"X6"	7'–0"
JOIST – EDGES	3"X10"	9'–7"±
JOIST – CENTER	3"X10"	9'–7"±
CROSS BEAMS	6"X12"	6'–6"
TRAIL HEADER	2"X10"	6'–6"

NOTES:

1. "Select" members shall be HDPE Recycled Plastic Lumber with at least 85% recycled content, "Select" by Bedford Technology, 2424 Armour Road, PO Box 609, Worthington, MN 56187–0609, Phone (507) 372–5558, or Approved Equal. Decking to have Simulated Wood Grain Top Surface.
2. "Fiberforce" members shall be HDPE Structural–Grade Recycled Plastic Lumber with at least 85% recycled content and added fiberglass strands for increased stiffness, "Fiberforce" by Bedford Technology or Approved Equal.
3. "Barforce" members shall be HDPE Structural–Grade Recycled Plastic Lumber with at least 85% recycled content, added fiberglass strands for increased stiffness, and two (2) ¾" Full–Length Fiberglass Reinforced Polymer Rods, "Barforce" by Bedford Technology or Approved Equal.
4. Color for all members to be "Mink" by Bedford Tech. or approved equal.
5. Helical Pilings to be by AB Chance, Support Works, or Approved Equal. Submit product literature, piling details, and piling plan for approval by Landscape Architect. Piling details and layout plan to be stamped by a MA Licensed Structural Engineer.
6. Assume 3,000 PSF soil bearing capacity for helical pier design calculations, to be confirmed.

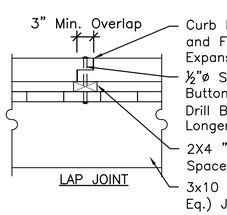

LAP JOINT

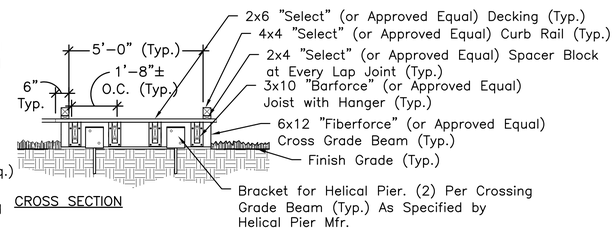

CROSS SECTION

Plastic Lumber Boardwalk with Helical Piers (Add Alternate #2)

Scale: ⅜" = 1'–0"

FOR PERMIT ONLY

CBA | Landscape Architects LLC
24 THORNDIKE STREET | CAMBRIDGE MA 02141
phone 617.945.9760 | www.cbaland.com | cba@cbaland.com
landscape architecture
urban design
master planning

CHOATE PARK - CASSIDY FIELD

Medway, MA

Details

REVISIONS:

1	09-22-17	P.B. Comments
2	11-7-17	Record Set

DATE:	08/17/2017
SCALE:	AS NOTED
FILE:	CHO-Details.dwg
DWN BY:	AJK
CKD BY:	CCB
PROJ. # :	1612a

L9.5

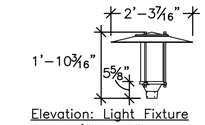

Elevation: Light Fixture
Scale: ½"=1'-0"

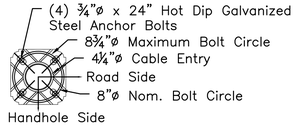

Plan: Anchor Template
Scale: 1"=1'-0"

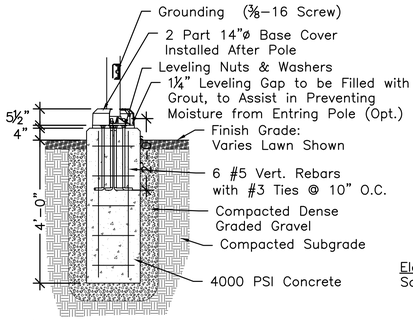

Section: Pole Footing
Scale: ½"=1'-0"

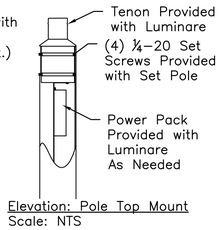

Elevation: Pole Top Mount
Scale: NTS

Notes:

1. Light Fixture is to be HW Patina by Louis Poulsen Inc. Light Source is to be a 25W LED at 3000K.
2. Light Pole is to be a 14' HT Louis Poulsen RSA 4.5" Pole.
3. Shop drawings required for concrete footing. Drawings are to be stamped by a MA Liscensed Structural Engineer.
4. Contractor to submit product literature for approval by Landscape Architect prior to ordering.
5. Light fixture and pole are to be black.
6. Contractor to follow all manufacturer's installation instructions and specifications.

Pedestrian Scale Light

Scale: ½" = 1'-0"

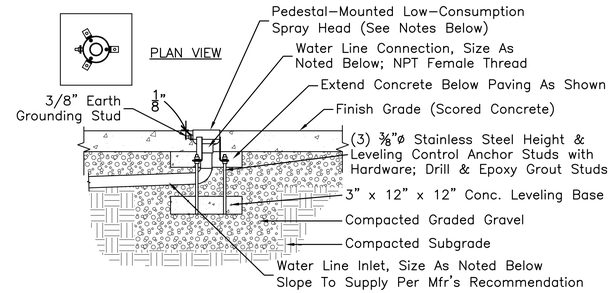

NOTES:

1. Jet Type A to be "Direct Jet No. 1" VOR0305 by Vortex or Approved Equal. Cap shall produce a single directional stream. Water flow rate 2-4 gpm; pressure 3-5 psi; inlet size ¾"ø.
2. Jet Type B to be "Jet Stream No. 2" Smart-Flow VOR325 by Vortex or Approved Equal. Cap shall produce a single soft vertical stream. Water Flow Rate 3-7gpm; Pressure 1-4 psi; Inlet Size ¾"ø.
3. Jet Type C to be "Water Bloom No. 2." VOR0322 by Vortex or Approved Equal. Water Flow Rate 7-11 gpm; pressure 4-8 psi; inlet size ¾"ø.
4. Jet Type D to be "Water Jelly No. 1" VOR7010 by Vortex or Approved Equal. Cap shall produce an inverted laminar bell spray pattern. Water flow rate 10-15 gpm; pressure 1-2 psi; inlet size 1½"ø.
5. Contractor to review details with Landsacpe Architect before installation.

Pedestal Mounted Water Jet

Scale: 1" = 1'-0"

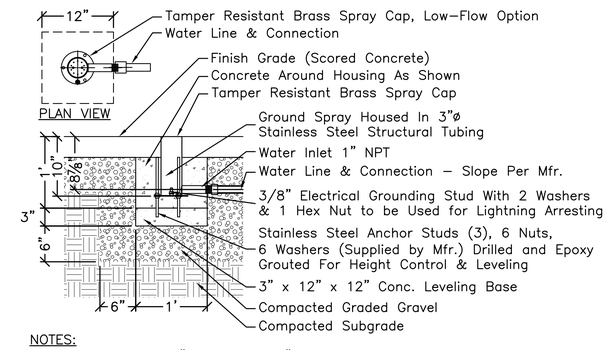

NOTES:

1. Jet Type E to be "Ground Geyser" Smart-Flow VOR0301.0100 by Vortex or Approved Equal. Cap shall have a 10-hole radial spray pattern arranged at 5° from vertical. Water Flow Rate shall be 4-6gpm. Pressure shall be 5-10 psi.
2. Detail to be reviewed by Landscape Architect before installation.

Cylinder Mount Water Jet

Scale: 1" = 1'-0"

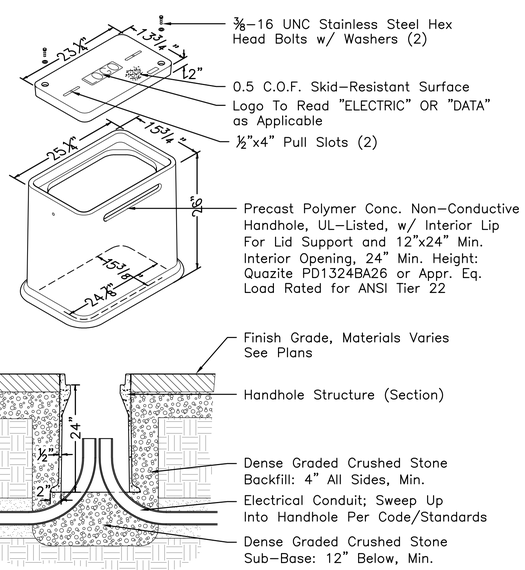

NOTE:
Handhole locations not shown on plan. Locations to be determined in field.

Electric Handhole

Scale: ¾" = 1'-0"

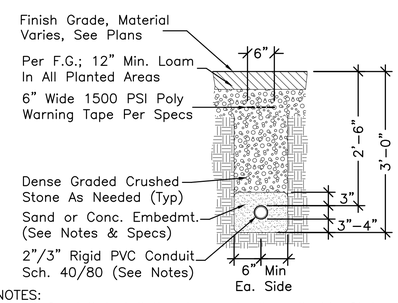

NOTES:

1. All Conduit installation to meet all applicable State, Local, and Federal Codes, and all Town of Medway Standards.
2. Under planted areas and Stabilized Stone Dust, Sch40 Conduit and Sand embedment are acceptable. Under all paved areas, use Sch.80 Conduit and Concrete Embedment.
3. Size Conduits as appropriate to required wiring; consider derating factors when applicable. Multiple conduits in a single duct bank shall be separated by 6" min. or greater if code requires.
4. All electrical work must be installed by a licensed electrician

Electrical Conduit

Scale: ¾" = 1'-0"

NOTES:

1. Spray activator will be purchased by owner. Contractor is responsible for all wiring, plumbing, assembly, and installation.
2. Electronically Controlled Spray Activator Bollard to be Smartpoint No.1 Post Activator (Vor-1910-0501-R2).
3. Contractor to install per manufacturer's directions (provided by Owner) and all local, state & Federal codes.
4. Contractor to review details with Landscape Architect before installation.

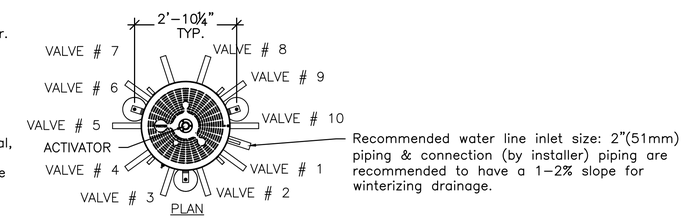

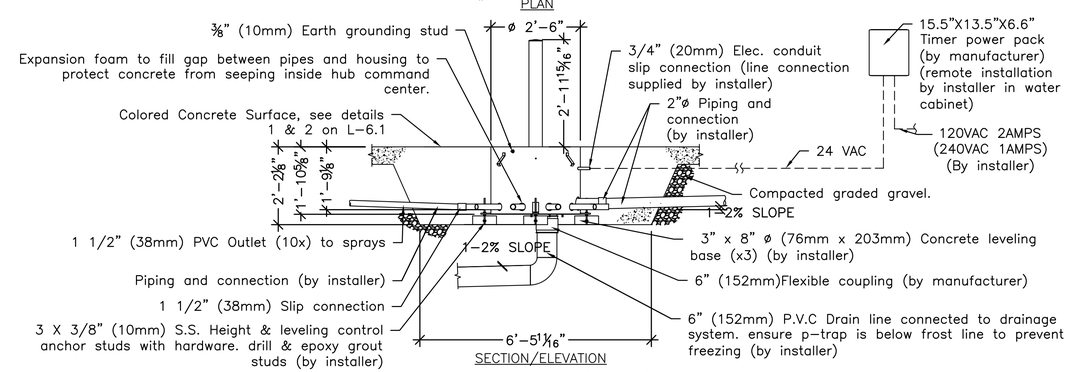

Electronically Controlled Spray Activator (FBO)

Scale: ½" = 1'-0"

FOR PERMIT ONLY

CBA | Landscape Architects LLC
24 THORNDIKE STREET I CAMBRIDGE MA 02141
phone 617.945.9760 I www.cbaland.com I cba@cbaland.com
landscape architecture
urban design
master planning

Improvements to Choate Park

Site Plan Submission

Details

REVISIONS:

1	09-22-17	P.B. Comments
2	11-7-17	Record Set

DATE:	08/17/2017
SCALE:	AS NOTED
FILE:	CHO-Details.dwg
DWN BY:	AJK
CKD BY:	DJC
PROJ. # :	1612a

L9.7

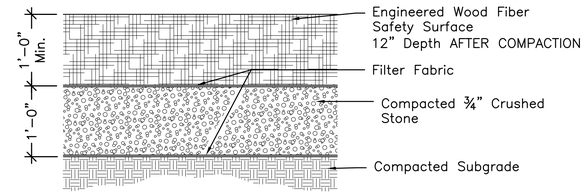

NOTES:
1. All "Wood Surface" to be Engineered Wood Fiber Safety Surface. Wood Surface to comply with ASTM F1292 (Impact Attenuation), F1951 (Accessibility), and F3075 (Specification for Engineered Wood Fiber), latest versions.
2. After compaction, wood surface to be flush with adjacent lawn areas.

Engineered Wood Fiber Safety Surface

Scale: 1" = 1'-0"

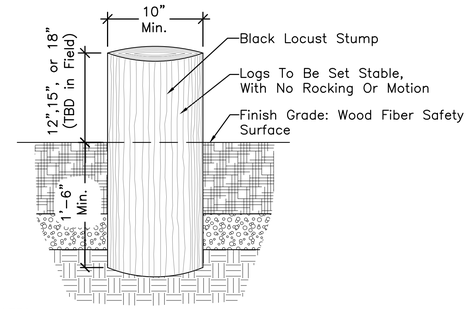

NOTES:
1. Logs shall be Approved by Landscape Architect.
2. Layout of Logs by Landscape Architect in Field.

Stepping Stump (Add Alternate #1)

Scale: 1" = 1'-0"

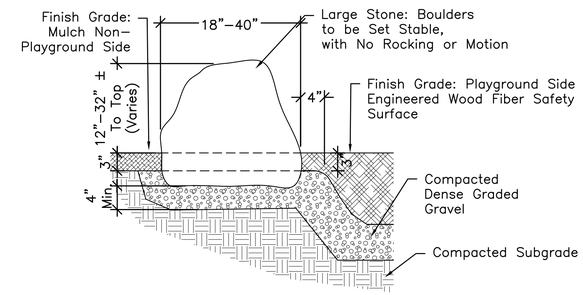

NOTES:
1. Large Stones shall be selected by Landscape Architect with Contractor.
2. Final layout of stones to be approved by Landscape Architect in field.

Border or Climbing Boulder (Add Alternate #1)

Scale: 1" = 1'-0"

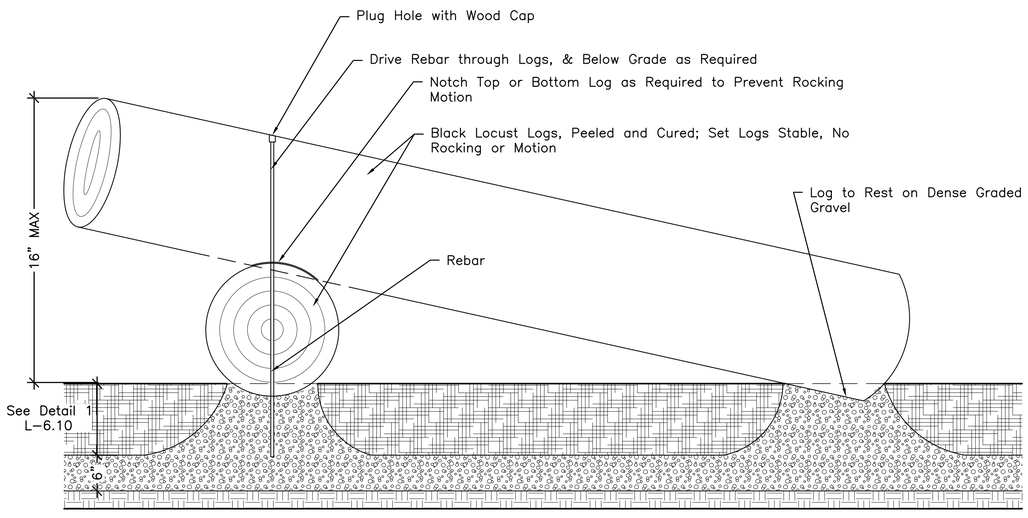

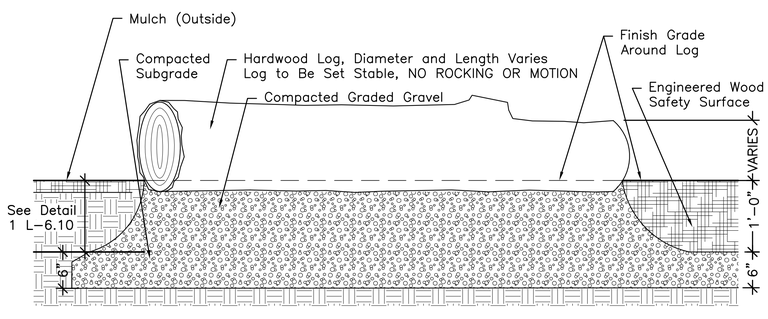

NOTES:
1. Logs shall be Robinia pseudoacacia (Black Locust) and Approved by Landscape Architect.
2. Layout of Logs by Landscape Architect in Field.
3. Bury any log surface in contact with ground 2" MINIMUM.
4. All logs and stumps to be set stable with no rocking or motion.
5. Notched logs shall be scribed at the intended angle in order to ensure a tight fit between logs.
6. Notches shall be cut minimum ⅓ and maximum ½ of diameter of top log. Any notches that do not meet these proportions require prior approval by Landscape Architect.
7. Base material shall be free-draining and shall not allow for standing water around log surface.
8. Log leading to climbing stump cluster is to have the top of the log planed flat.

Border or Balancing Log (Add Alternate #1)

Scale: 1" = 1'-0"

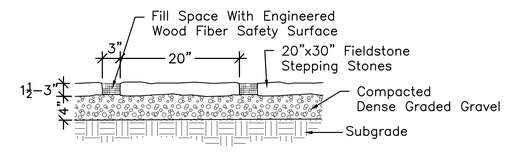

Stepping Stones (Add Alternate #1)

Scale: 1"=1'-0"

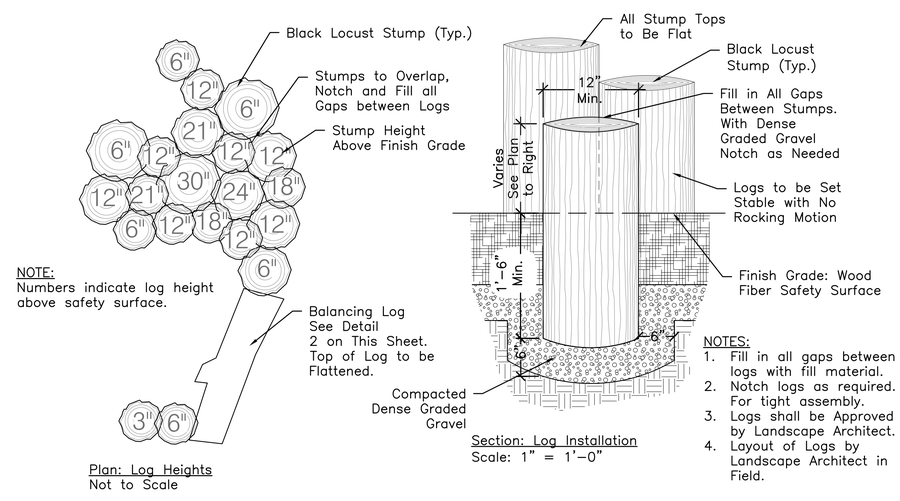

NOTES:
1. Fill in all gaps between logs with fill material.
2. Notch logs as required. For tight assembly.
3. Logs shall be Approved by Landscape Architect.
4. Layout of Logs by Landscape Architect in Field.

Climbing Stump Cluster (Add Alternate #1)

Scale: 1" = 1'-0"

FOR PERMIT ONLY

CBA | Landscape Architects LLC
24 THORNDIKE STREET I CAMBRIDGE MA 02141
phone 617.945.9760 I www.cbaland.com I cba@cbaland.com
landscape architecture
urban design
master planning

Improvements to Choate Park

Site Plan Submission

Details

REVISIONS:		
1	09-22-17	P.B. Comments
2	11-7-17	Record Set
DATE:	08/17/2017	
SCALE:	AS NOTED	
FILE:	CHO-Details.dwg	
DWN BY:	AJK	
CKD BY:	DJC	
PROJ. # :	1612a	

L9.8

Renderings of the Proposed Play Equipment

CBA | Landscape Architects LLC
24 THORNDIKE STREET | CAMBRIDGE MA 02141
phone 617.945.9760 | www.cbaland.com | cba@cbaland.com
landscape architecture
urban design
master planning

Improvements To Choate Park

Site Plan Submission
Play Equipment

REVISIONS:		
1	09-22-17	P.B. Comments
2	11-07-17	Record Set
DATE:		08/17/2017
SCALE:		AS NOTED
FILE:		CHO-Play.dwg
DWN BY:		Manufacturer
CKD BY:		DJC
PROJ. # :		1612a

L10.0

SAND BEACH

PICNIC AREA

WATER FEED TO PROPOSED WATER FOUNTAIN

6" PVC L=58'

CB-2
RIM: 193.29
I(I): 187.56 (FROM CB-1)
I(O): 187.39 (TO HW)

6" HDPE
INV=193.33'

CB-1
RIM: 195.22
I(O): 188.49 (TO CB-2)

6" PVC L=85'

3/4" COPPER

BATH HOUSE

REPLACE EXISTING BUILDING SEWER WITH NEW 6" CI PIPE VERIFY EXIT LOCATION AND ELEVATION IN FIELD

SMH-1
RIM=195.80
INV.(IN)=192.00 (V.I.F.)
INV.(OUT)=191.90

3
C-2.1

SS
6" PVC L=21'

CONNECT INTO EXISTING CB
INV.=189.00

REPLACE EXISTING CATCH BASIN FRAME AND GRATE WITH MANHOLE FRAME AND COVER

SPILLWAY GATE

SMH
RIM:193.08
I(I): 186.03
I(O): 185.90

WF 1B

12" RCP

SS
6" PVC L=56'
S=0.03

REPLACE EXISTING CATCH BASIN FRAME AND GRATE WITH MANHOLE COVER AND FRAME

RF 7A

RF 6B

RF 7B

RF 6A

SEPTIC TANK

SMH-2
RIM=194.50
INV.(IN)=190.45
INV.(OUT)=190.40

REMOVE AND DISPOSE OF EXISTING SEPTIC TANK

SS
6" PVC L=110'
S=0.03

SMH-3
RIM=193.10
INV.(IN)=187.10
INV.(OUT)=187.05

CB
R: 194.57
HOODED
WATER: 191.73

RF 8B

RF 5A

WOODED AREA

NOTE:

EXISTING SEPTIC SYSTEM TO BE ABANDONED IN ACCORDANCE WITH TITLE V

INFILTRATION SYSTEM
INV.(IN)=186.18
INV.(OUT)=186.93
BTM=185.68

10
C-2.1

TENNIS COURTS

6" PVC L=178'
S=0.03

41.00'

21.00'

RF 9B

RF 4A

12" HDPE
INV=191.13

DMH-1
RIM=191.10
INV.(IN)=186.86
INV.(OUT)=186.76

2
C-2.1

RF 10B

RF 3A

12" HDPE
INV=193.26

15" HDPE
L=11'

15" HDPE
L=12'

15" HDPE
L=14'

15" HDPE L=50'

RF 11B

CHICKEN BROOK

RF 2A

WQU-1
RIM=190.45
INV. (IN)=186.30
(OUT)=186.35

1
C-2.2

DW1
RIM=189.00
INV.(IN)=185.50

8
C-2.1

DCB-1
RIM=190.24
INV.=186.50

2
C-2.2

RF 12B

RF 1A

12" HDPE
INV=193.95

4
C-2.1

CONNECT TO EXISTING 10" SEWER
INV.(IN)=182.26
INV.(EX 10")=181.71
INV. 181.71 BASED ON RECORD PLAN. CONFIRM IN FIELD PRIOR TO ORDERING STRUCTURES

CB
RIM: 195.09
HOODED
WATER: 191.74

12" HDPE
INV=191.42

12" RCP
INV=191.52

12" RCP
INV=187.35

12" RCP
FILLED
TOP=188.76

12" RCP
INV=187.54

FEMA ZONE
AE FLOODWAY

12" RCP
INV=188.23

FEMA FLOOD

LEGEND:

D	PROPOSED STORM DRAINAGE LINE (6 C-2.1)
W	PROPOSED WATER LINE (7 C-2.1)
SS	PROPOSED SANITARY SEWER LINE (6 C-2.1)
SMH	PROPOSED SANITARY SEWER MANHOLE
DMH	PROPOSED STORM DRAINAGE MANHOLE
WQU	PROPOSED WATER QUALITY UNIT
CB	PROPOSED DOUBLE CATCH BASIN (1 C-2.1)
IP	PROPOSED INSPECTION PORT
	PROPOSED CORPORATION STOP
	PROPOSED DREYWELL

NOTE:
CONTRACTOR TO PERFORM ONE DEEP TEST HOLE IN THE LOCATION OF THE PROPOSED INFILTRATION SYSTEM PRIOR TO INSTALLATION. COORDINATE WITNESSING OF DTH WITH DESIGN ENGINEER

NOTE:
THE NEW SEWER CONNECTION MUST BE INSTALLED AND THE EXISTING SEPTIC SYSTEM MUST BE FULLY DECOMMISSIONED PRIOR TO BEGINNING EXCAVATION FOR PROPOSED INFILTRATION SYSTEM

0 1

CBA | Landscape Architects LLC
24 THORNDIKE STREET I CAMBRIDGE MA 02141
phone 617.945.9760 I www.cbaland.com I cba@cbaland.com
landscape architecture
urban design
master planning

CHOATE PARK - CASSIDY FIELD

Medway, MA

Drainage and Utilites Plan

DATE:	10-02-2017
	10.19.17
SCALE:	1"=20'
FILE:	17028.00cd.dwg
DWN BY:	NS
CKD BY:	AMT
PROJ. # :	17027.00

COMMONWEALTH OF MASSACHUSETTS
ANDREW M. TRUMAN
No. 45505
CIVIL
REGISTERED PROFESSIONAL ENGINEER

C1.2

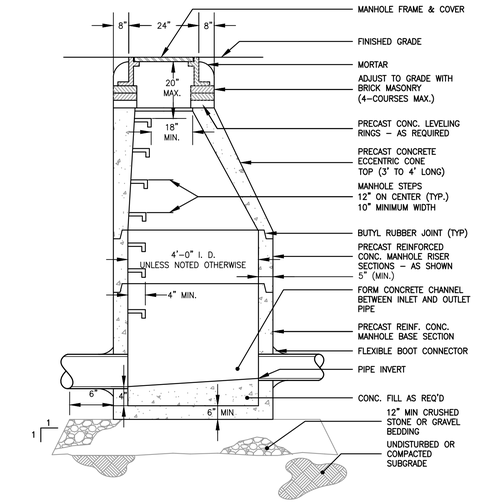

2 PRECAST STORM DRAIN MANHOLE

NTS

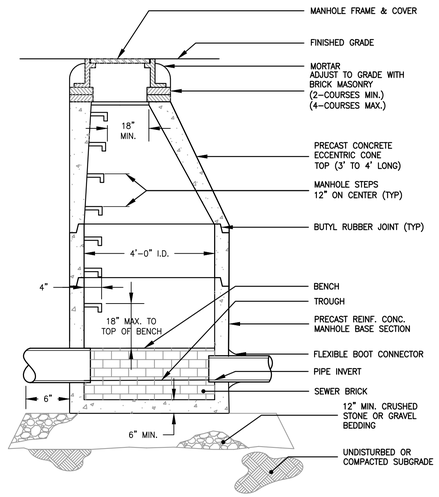

3 PRECAST SANITARY MANHOLE

NTS

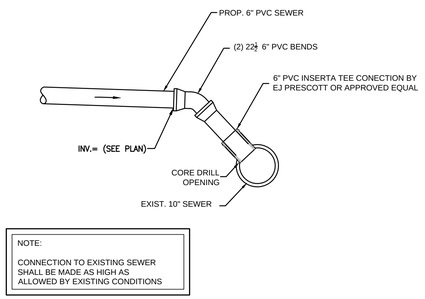

4 CONNECTION TO EXISTING SEWER

NTS

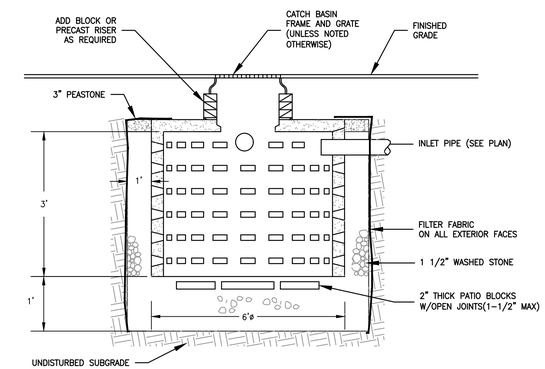

5 LEACHING CATCH BASIN/DRYWELL 3'

NTS

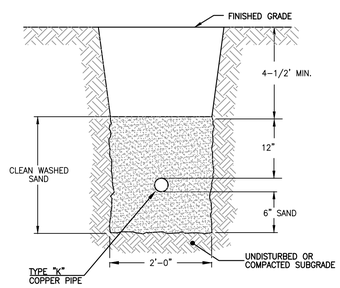

7 COPPER PIPE TRENCH

NTS

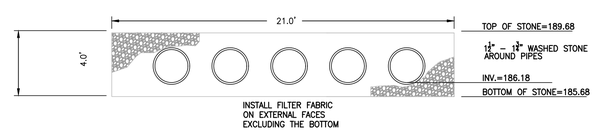

SECTION A–A

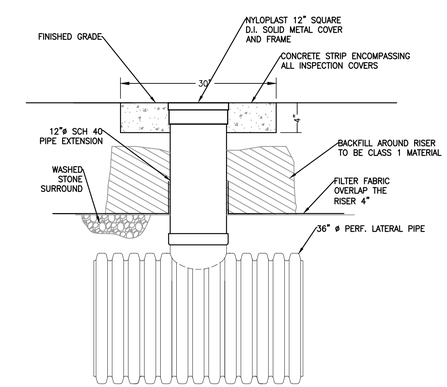

DETENTION SYSTEM CLEANOUT DETAIL

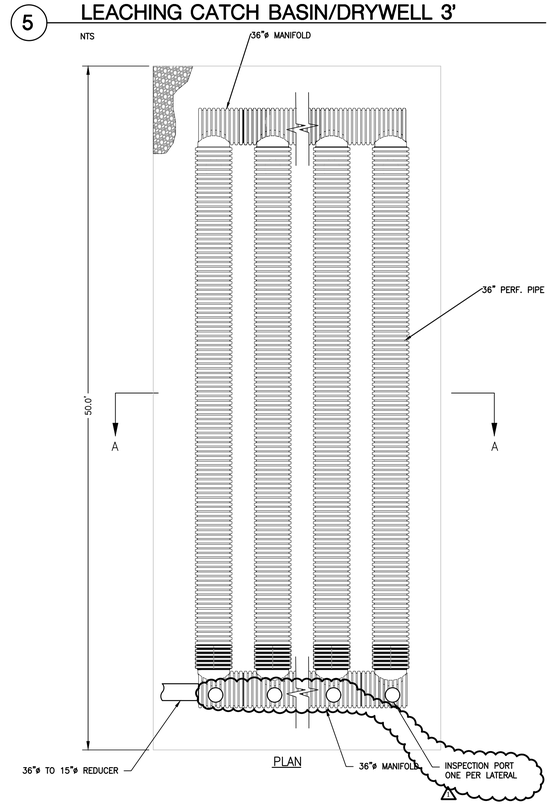

10 STORMWATER DETENTION SYSTEM

NTS

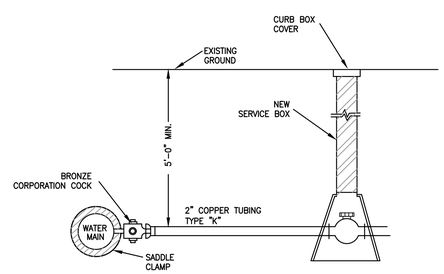

9 CORPORATION STOP & METER

NTS

CBA | Landscape Architects LLC
24 THORNDIKE STREET I CAMBRIDGE MA 02141
phone 617.945.9760 I www.cbaland.com I cba@cbaland.com
landscape architecture
urban design
master planning

CHOATE PARK - CASSIDY FIELD

Medway, MA

Drainage and Utilites Plan

DATE:	10-02-2017
	10.19.17
SCALE:	NTS
FILE:	17028.00cd.dwg
DWN BY:	NS
CKD BY:	AMT
PROJ. # :	17028.00

COMMONWEALTH OF MASSACHUSETTS ANDREW M. TRUMAN No. 45505 CIVIL REGISTERED PROFESSIONAL ENGINEER

C2.1

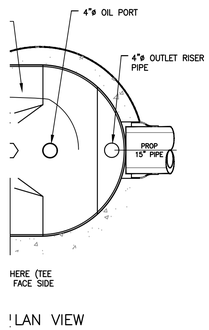

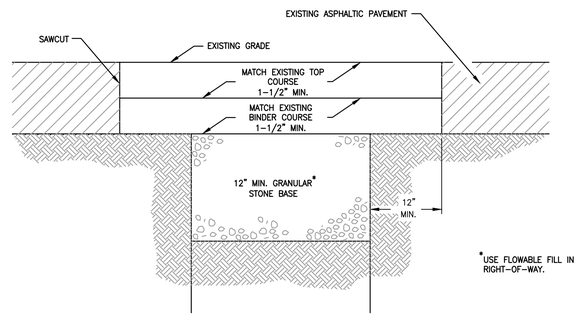

2 TRENCH PATCHING DETAIL

NTS

CBA | Landscape Architects LLC
24 THORNDIKE STREET I CAMBRIDGE MA 02141
phone 617.945.9760 I www.cbaland.com I cba@cbaland.com
landscape architecture
urban design
master planning

CHOATE PARK - CASSIDY FIELD

Medway, MA

Drainage and Utilites Plan

REVISIONS:

DATE:	10-02-2017
	10.19.17
SCALE:	NTS
FILE:	17028.00cd.dwg
DWN BY:	NS
CKD BY:	AMT
PROJ. # :	17028.00

COMMONWEALTH OF MASSACHUSETTS
ANDREW M. TRUMAN
No. 45505
CIVIL
REGISTERED PROFESSIONAL ENGINEER

C2.2