APPROVED – October 4, 2021

Town of Medway
DESIGN REVIEW COMMITTEE
155 Village Street, Medway MA 02053
(508) 533-3291

DRC Meeting Minutes: Monday, June 07, 2021

Medway Public Library Conference Room – 26 High Street

Call to Order: – With a quorum present, this remote meeting was called to order by Chair Mr. Buckley at 7:03 p.m.

Attendees:

	04/05/2021	04/26/2021	05/03/2021	05/17/2021	06/07/2021
Matthew Buckley	X	X	X	X	X
Rich Di Iulio	-	-	-	-	-
Jessica Chabot	X	Absent with Notice	Absent with Notice	Absent with Notice	Absent with Notice
Tom Gay	X	X	X	Absent with Notice	Absent with Notice
Rachel Walsh	X	Absent with Notice	Absent with Notice	X	X via speakerphone
Dan Connolly	X	X	Absent with Notice	X	Absent with Notice
Alex Siekierski	X	X	X	X	X
Janine Clifford	-	X	X	X	X

Also Present:

- Susan Affleck Childs, Planning and Economic Development Coordinator
- Mario Castagna, Thinkbox Graphics, for Brows by Harsha, 112A Main St.
- Julianne Placanica**,** owner of Medway Nutrition, 113 Main Street
- Todd Wilson, Diversified Funding (Medway Place owner) and Joe Buchhloz, ViewPoint signs for Rocky's Hardware, 98 Main St.

Present via ZOOM

- Sreelatha Allam, Recording Secretary

Meeting Minutes

05-17-2021 Meeting:

A motion was made by Mr. Buckley to approve the amended minutes of the 05/17/2021 meeting as presented, seconded by Ms. Walsh.

Roll Call Vote:

Matt Buckley - Aye

Rachel Walsh - Aye

Alex Siekierski – Aye

Janine Clifford- Aye
The motion passed.

<u>Sign Design Review – Brows by Harsha, 112A Main Street (Medway Place)</u>

The application is for a proposed sign for Brows by Harsha at Medway Plaza at 112A Main Street. Mr. Mario Castagna from ThinkBox Graphics, the applicant's representative, attended the meeting to discuss the proposed sign. Based on the feedback received at the May 17th, 2021 meeting, minor adjustments were made to the sign and the revised design was submitted to the Committee. (**See Attached**) The revised proposed design includes red channel letters (with trim caps and black returns) that comply with the signage program for Medway Place. The dimensions are 29.59 in x 70.78 in, for a total of 14 sq. ft. of sign surface area. The proposed sign is a stacked design with the words "Brows" above in italics with "by Harsha" below. It will be internally illuminated LED lighting. An external raceway will be used to house the electrical connections and will be painted to match the building color. The sign will be centered on the storefront space.

Members commented that the design color scheme provides good visibility to the business from the street. There was discussion about reducing the size of the lower portion, "by Harsha" to be slightly smaller so it doesn't extend beyond the entire width of "Brows" above. The intent of the recommendation is to increase the legibility of the overall sign design. Suggestion was made to slightly increase the spacing between the letters so that they are not running together on "Brows". It was mentioned that the applicant should consider painting/ cleaning the facade prior to installation to ensure that marks left behind from prior signage are removed. Mr. Castagna agreed to the additional DRC comments and will relay them to the applicant. He added the revised version of the sign slightly strays away from the original company branding. The applicant has not seen this version yet and he hopes they'll go along with it.

Mr. Buckley agreed to draft the DRC's review letter to include the discussion points.

<u>Sign Design Review - Medway Nutrition, 113 Main Street</u>

Owner Julianne Placanica was present. Medway Nutrition is opening a store at 113 Main Street. Members liked the revised sign logo as submitted. (**See Attached**) The design includes a green circular logo with the business name in white lettering and a yellow sunflower underneath the business name. The proposal is to include the logo on a 2' by 4' panel on the existing free standing monument sign (total equal 16 sq. ft.) and to have 2 signs on the building – one 4' round sign on the west facing façade (16 sq. ft.) and one 3' round sign on the south facing façade next to the entrance (9 sq. ft.). It was noted that the same logo will be used in their social media as well.

Members commented the logo is very visible, attractive, and comprehensive. There was a comment about adding business hours to one of the signs and some lighting. It was suggested that the entire sign panel on the free-standing sign have the green background instead of white. The landscaping around the monument sign was brought up and discussed again; the applicant was reminded that the monument sign needs to be landscaped around the base.

Ms. Walsh will prepare the DRC review letter.

Sign Design Review- Rocky's Hardware, 98 Main St. (Medway Place)

The application is for a proposed sign for Rocky's location at 98 Main Street. Mr. Wilson and Mr. Buchholz representing the applicant attended the meeting. (**See Attached**) Proposed is an LED internally illuminated channel letter sign with white translucent faces and graphic, reading Rocky's Ace Hardware, affixed to the proposed new mansard style façade improvement. The total area of signage is 120 sq. ft. which is compliant with the Bylaw provisions of the Central Business District. The Committee noted the signs dimensions as shown on the drawing do not calculate to 120 sq. ft. Mr. Buchholz reviewed the information and noted the correct sign dimensions are 72" by 240".

The Committee offered a series of recommendations:

- The drawing should be revised to show the accurate sign measurements.
- Clean, prepare and paint the existing stucco façade to remove any ghosting and eliminate the many existing holes and imperfections from prior tenant signage, to allow a cleaner appearance to the existing fascia and for the new sign.
- Set lighting of the sign to an appropriate brightness and set to a timer that will shut the sign off after business hours.
- Consider lower color temperatures for the LEDs (below 5000K) to avoid blue appearance to white lettering.
- A panel for Rocky's on the free-standing monument sign for Medway Place was not presented in the application. The DRC recommends a sign that has lettering consistent with both the Rocky's Ace Hardware logo and the master signage plan for the existing monument sign.
- Window signage was not presented in the application. The DRC recommends including hours of operation on the front doors in a manner that is compliant with the allotment authorized in the Sign Bylaw.
- Do not introduce illuminated or animated signs in the windows. Flashing OPEN signs are prohibited.
- Do not introduce window signs beyond the allotment for size and use as described in the Sign Bylaw and recommended above.

- Do not introduce additional signage on onsite amenities such as the proposed fencing around the outside storage area, propane fueling station and tanks, etc.

Mr. Buckley will prepare the DRC review letter.

Façade Improvement Review- Rocky's Hardware, 98 Main St. (Medway Place)

The application is for the proposed façade improvement for a new soffit and facade parapet above Rocky's Ace Hardware store located at 98 Main Street in the Medway Place shopping center. (**See Attached**.) Mr. Wilson and Mr. Buchholz, again representing the applicant, attended the meeting. Per the revised design (last revised May 27, 2021), the dimensions of the proposed Façade & Parapet area are 40 ft. x 13 ft. The building will be upgraded to make it energy efficient. To that effect, a metal cladding system is being proposed for the project. The façade is comprised of vertical metal standing seam panels and the goal is to install them flush with the adjacent existing façade material. The parapet will be located centrally above the storefront.

The detailed design and technical scope of the project was presented to the committee. There was in-depth discussion about lighting, landscaping, security, signage, power, electrical, and mechanical scope of the project. New metal decking and roofing is part of the current project. The discussion included matching the existing color, façade vertical slopes, soffit and parapet cap and length of side walls to conceal the structural supports and roofing. Recommendation was made that the new façade should match the existing red color of the shopping center's other metal standing seam façade parapet areas. The existing metal parapet areas have three angled sides which also shield the parapet. The supports on the roof side should be of red color. Any new wiring and access panels should be concealed. Members asked that before the work commences, the applicant should submit the updated technical drawings to the Medway Building Department to include revised elevations for all three sides, partial roof plan to indicate the roof pitch and extent of side walls, and new parapet wall slopes. All existing façade areas that will be demolished should be painted to cover footprint of previous signage. Mr. Siekierski will prepare the DRC review letter.

Per Ms. Walsh's request, the remaining agenda items were tabled until the next DRC meeting.

Adjournment

Motion was made by Mr. Buckley to adjourn the meeting, seconded by Ms. Walsh.
Roll Call Vote:
Matt Buckley- Aye
Rachel Walsh- Aye

Alex Siekierski- Aye

Janine Clifford- Aye

The motion passed.

The meeting was adjourned at 9:18 p.m.

Respectfully Submitted,

Sreelatha Allam
Recording Secretary

Reviewed and edited by,

Susan E. Affleck-Childs
Planning and Economic Development Coordinator

Susan Affleck-Childs

From: Jon Farnsworth <jon@thinkboxgfx.com>
Sent: Wednesday, May 19, 2021 2:10 PM
To: Susan Affleck-Childs
Subject: Design Review Continuation

My apologies for missing the May 17th DRC meeting for discussion of the proposed sign for Brows by Harsha at Medway Plaza at 112A Main Street. I have spoken with Susy Affleck-Childs who provided some feedback on the sign from the DRC. I have made some minor adjustments to the sign and would like to meet with the Design Review Committee at its next meeting to review. I understand that the meeting will be on June 7th. I also agree to extend the time period for the DRC to act on our application for sign review to June 11th.

Thank you,

Jon Farnsworth

think box WRAPS & SIGNS
JON FARNSWORTH
CO-OWNER / ART DEPT.
200 CENTER ST. BELLINGHAM, MA
CELL: 774-245-6074
OFFICE: 508-928-2488
FOLL

Susan Affleck-Childs

From: Jon Farnsworth <jon@thinkboxgfx.com>
Sent: Wednesday, May 19, 2021 12:49 PM
To: Susan Affleck-Childs
Subject: Re: Revised Drawing for new meeting

Hi Susan,

The Salon's logo font does not have any other weight versions, so we applied an inline to the font to make it appear thinner and remove some of the stroke, removed the italic slant, and shrunk it down a bit so the ends don't go past the main word. I looked into it, and the original version we sent actually is their company's branding that they use on everything, and that they had designed to look this way, so we tried to keep it as close to the original as possible while also taking in account your notes. Let me know your thoughts. I haven't shown them this revised version yet, and I'm hoping they will go along with it after approval now that we are straying from their company logo.

Also, I was curious now that we're in the predicament we're in and we'll be waiting another at least 3 weeks for approval if we can get them a temporary banner, as they are planning to open sooner than later. Please let me know if that's a possibility.

Thank you,

Jon

On Wed, May 19, 2021 at 12:06 PM Susan Affleck-Childs <sachilds@townofmedway.org> wrote:

> Hi Jon,
>
> Thanks. But . . I am not seeing any difference between this one and the previous version. Help me understand. Thanks.
>
> **From:** Jon Farnsworth [mailto:jon@thinkboxgfx.com]
> **Sent:** Wednesday, May 19, 2021 11:18 AM
> **To:** Susan Affleck-Childs <sachilds@townofmedway.org>
> **Subject:** Revised Drawing for new meeting
>
> Hello Susan,
>
> Attached is the new drawing we would like to re-submit for review at the next meeting. Please let us know when we should expect to attend.

Thank you,

Jon

JON FARNSWORTH
CO-OWNER / ART DEPT.
200 CENTER ST, BELLINGHAM, MA
CELL: 774-245-6074
OFFICE: 508-928-2488

FOLL

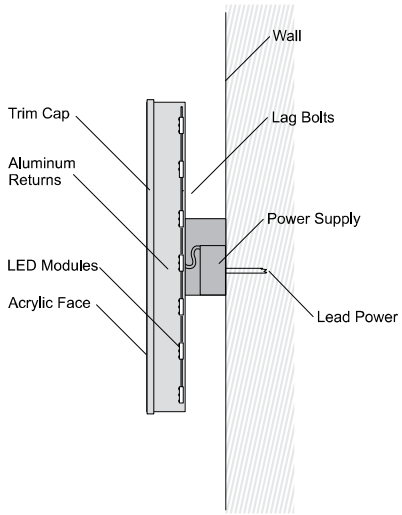

Internally Lit Channel Letter Sign
LED Illuminated
Red Acrylic Faces
Black Trim Caps
Raceway painted color of building

Building 14ft linear frontage
Sign - 13.9 sf.

thinkbox WRAPS & SIGNS

DESIGN PROOF

This artwork is owned by, and the information contained in is proprietary to Thinkbox Graphics, Inc. By receipt hereof the holder agrees not to use the artwork, disclose it to any third party, nor reproduce this artwork without the prior written consent of Thinkbox Graphics, Inc. Holder also agrees to immediately return this artwork upon request of Thinkbox Graphics, Inc. By signing off on this proof customer agrees that all information contained is accurate and that all colors, fonts, graphics, spelling and overall look of artwork. Artwork may not be used for any purpose without permission from Thinkbox Graphics, Inc. until contractual agreements have been met, and ownership has been transferred to holder. By replying to this proof with an email, fax or verbal approval you are agreeing that all colors, grammar, logos, branding and overall look of signage is satisfactory.

Medway Design Review Committee (DRC)

Application for Sign Design Review

Medway Location/Address *where the sign will be installed:* 113 Main Street

What is the interior width of the storefront? 21

Building/Development Name: *(if applicable)*: _____

Medway Zoning District: CB

Applicable Sign Standard Table *(from Medway Zoning Bylaw)* **Table #** 5.

Applicant Information *(Local Medway business establishment where the sign is to be installed)*

Business Name: Medway Nutrition

Mailing Address: 113 Main Street

Medway, MA 02053

Contact person: Julieanne Placanica

Phone: 5085963187 Cell Phone _____

Email address: medwaynutrition21@gmail.com

Type of Proposed Signs – For sign definitions, refer to *Medway Zoning Bylaw (Section 7.2 Signs Regulation).* The *Medway Zoning Bylaw* is available online at: www.townofmedway.org.

Type of Sign	# of Signs	Signs Dimensions	Total Square Footage of Sign Surface Area	Sign Height	Type of Illumination (internal, external or none)
Wall/Façade Sign	2	3 foot circle, 4 foot circle	9 sq ft and 16 sq ft	4 ft	None
Free-standing Individual Business Sign	1	2 x 4	16 sq ft	2 ft	None
Free-standing Multi-Tenant Development Sign					
Awning Sign					
Projecting Sign					
Directory Sign					
Window Sign					
Other Type of Sign (Describe)					

Attach the following items to this form. pdf format is requested for the application form and all attachments. Please email application and documents to sachilds@townofmedway.org

- ☑ 1. Manufacturer's scaled COLOR drawing with dimensions and DETAILED specifications for materials and illumination.
- ☑ 2. For a wall sign, a scaled image showing the sign's position on the building.
- ☐ 3. Landscaping Plan and Plot Plan marked with location of the free-standing sign and distances from street/lot lines.
- ☑ 4. Color photograph(s) of building/location(s) where sign will be installed and existing signs.
- ☐ 5. Color drawing of corporate logo *(if applicable).*
- ☐ 6. Color photograph of similar/comparable sign on which your sign design is based.
- ☐ 7. A letter or other descriptive or explanatory information you want to provide to the DRC.

Does this application pertain to a completely new sign?

_____ Yes _____ No *(If NO, please include photos/info of the existing sign you are modifying)*

Does this application pertain to a replacement panel for an existing sign structure?

_____ Yes *(If yes, please include photos/info of the existing sign)* _____ No

If the business is located in a multi-tenant development, is there a Master Sign Plan for the development?

_____ Yes _____ No _____ Don't Know

Does your lease require the property owner's approval of your sign?

_____ Yes _____ No _____ Not applicable

Sign Designer/Fabricator/Installer Information

Company Name: SignsPlus

Mailing Address: 89 South Main Street Milford,MA 01757

Contact person: Karen Mullen

Phone: 508 478 5077 Cell Phone: _____

Email address: karen@signs-plus.net

Property Owner Information

Company Name: Rte. 85 Realty Corp.

Mailing Address: PO Box 444

Contact person: Jack Meehan

Phone: 508 954 9657 Cell Phone: _____

Email address: _____

Proposed sign designs are reviewed by the Medway Design Review Committee (DRC).
The business owner and sign designer/fabricator must attend the DRC meeting.
The DRC generally meets on the first & third Monday night of each month at 7 p.m.
at the Medway Library, 26 High ST.
(DRC meeting agendas are posted at the Town's web page at www.townofmedway.org)

An Application for Sign Design Review and all supporting information must be submitted to the Medway Planning office by 12 noon on the Wednesday before a DRC meeting.

Please submit this application form and all attachments as follows:

Email:	sachilds@townofmedway.org **PREFERRED**
Fax:	508-321-4987
Mail:	Design Review Committee c/o Medway Planning office 155 Village Street, Medway, MA 02053
Drop Off:	Medway Planning office @ Medway Town Hall, 155 Village Street
Phone:	508-533-3291

Applicants and sign designers should read the Sign Guidelines included in the Medway Design Review Guidelines before developing a sign design.

http://www.townofmedway.org/design-review-committee/pages/sign-design-review

Sign designs should be developed in accordance with the *Sign Design Guidelines.*

Date Application Received by Medway Planning office: _____

Reviewed by Medway Planning Coordinator: _____ ***DRC Meeting Date:*** _____

Updated 6-10-16

Medway
Nutrition

32" DIAMETER sign - 3m alupanel

2'x4' ds sign - 6m alupanel

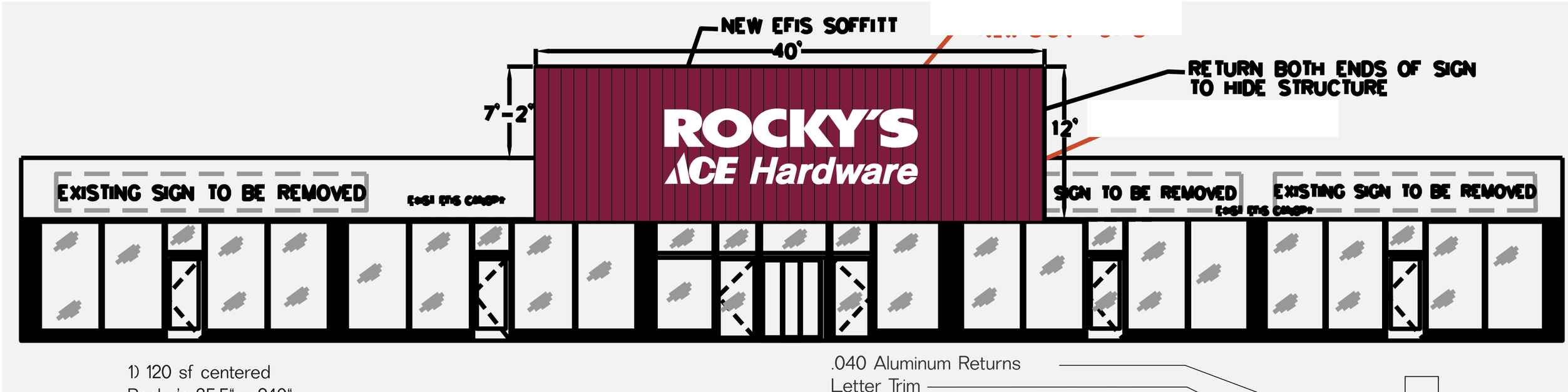

1) 120 sf centered
Rocky's 35.5" x 240"
ACE 30"x 70.375
Hardware 25.5"x 159.25"
Total Boxed SF 120
Overall 7'6 x 26'5"

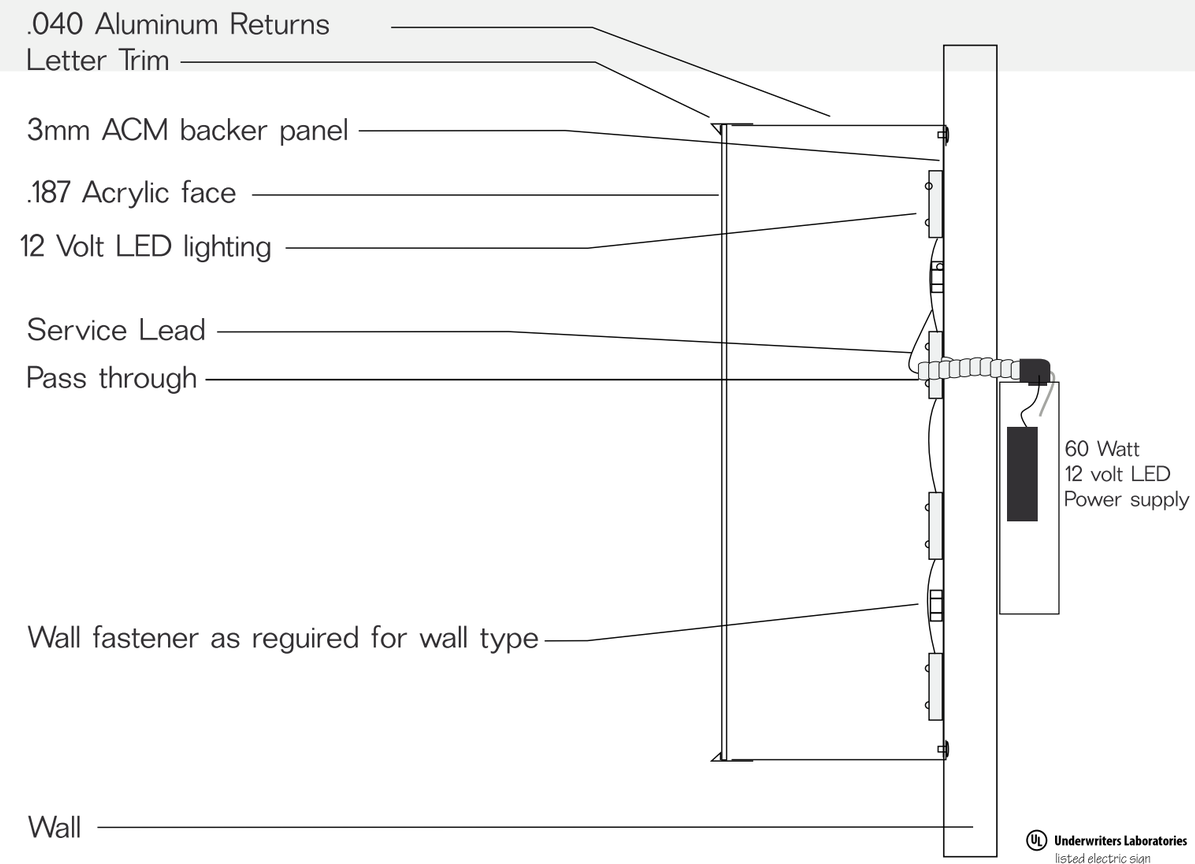

Job:	Account Manager:	Date:	Revisions:	Revisions:
Rocky's Ace Hardware	Joe Buchholz	3-19-21	3-19-21	Rocky's Medway CD
Location: 108-114 Main St Medway MA	File: Building sign CD Rocky's/Sales/Drawings	Designer: Joe Buchholz		

THIS PROPOSAL DRAWING CONTAINS ORIGINAL ELEMENTS CREATED BY VIEWPOINT SIGN AND AWNING. ALL RIGHTS RESERVED. UNAUTHORIZED DUPLICATION OR REPRODUCTION IS PROHIBITED.

ViewPoint SIGN AND AWNING
1.508.393.8200
FAX 1.508.393.4244

Customer Approval | Acct. Manager Approval | Production Approval

THIS PROPOSAL DRAWING CONTAINS ORIGINAL ELEMENTS CREATED BY VIEWPOINT SIGN AND AWNING. ALL RIGHTS RESERVED. UNAUTHORIZED DUPLICATION OR REPRODUCTION IS PROHIBITED.

Medway Design Review Committee (DRC)

Medway Town Hall, 155 Village Street, Medway, MA 02053
508-533-3291 drc@townofmedway.org

Application for Façade Improvement Review

Building/Development Name: *(if applicable)*: _____

Location Address *(where façade improvement will occur)*: 114 Main ST

Applicant Information:

Business Name: Rocky's Ace Hardware

Mailing Address: 40 Island Pond Rd
Springfield MA 01118

Contact person: Kevin Bradley

Phone: 413-781-1650x138 Cell Phone 413-519-3172

Email address: kbradley@rockys.com

Check one of the following:

____ You own the subject property

____ You are a tenant of the subject property

Property Owner Information *(if different than Applicant)*

Company Name: Medway Realty LLC

Mailing Address: 63 Atlantic Ave Boston MA 02110

Contact person: Todd Wilson

Phone: 781-284-3885 Cell Phone: 781-760-8230

Email address: twilson@DFI.cc

Type of Proposed Façade Improvement – Check all that apply

____ Installation or replacement of awnings

X Change in the building's exterior surface materials

____ Rearrangement or addition of windows or doors

____ Façade reconstruction or replacement

Work Summary – Provide a brief description of the proposed scope of façade improvement work.

Change facade over entrance from EFIS to Burgundy metal standing seam

Attach the following items to this application. Pdf format is requested.

_____ 1. Photo of existing building façade

_____ 2. Drawing showing the design of the proposed façade improvements including details on materials, dimensions, colors, lighting fixtures, etc.

_____ 3. A letter or any other descriptive or explanatory information you want to provide to the DRC to fully explain the project.

Designer/Architect/Builder

Company Name: _____

Contact person: _____

Office Telephone: _____ Cell Phone: _____

Email address: _____

Designated Representative

Name: TODD WILSON

Office Telephone: _____ Cell Phone: 781-760-8230

Email address: twilson@DFI.CC

Applicant Signature - The undersigned, being the Applicant for Façade Improvement Review herewith submits this application and other required documents to the Medway Design Review Committee. I (we) hereby certify that the information contained in this application is a true, complete and accurate representation of the facts regarding the property and proposed façade improvements. I (we) understand that the Design Review Committee will review the application at a posted open meeting which I or my representative will attend.

(If applicable), I hereby authorize _____ to serve as my Designated Representative to represent my interests with respect to this application.

_____ _____

Signature of Property Owner Date

_____ _____

Signature of Applicant (if other than property owner) Date

Medway Realty LLC 5/25/21

Signature of Designated Representative Date

Proposed façade improvement designs are reviewed by the Medway Design Review Committee (DRC) at public meetings. The DRC generally meets on the first & third Monday night of each month at 7 p.m. at the Medway Public Library, 26 High ST.

The Applicant or Designated Representative must attend the DRC meeting at which this application will be reviewed. Plan to bring samples of materials and colors to the meeting to review with the DRC.

An application for Façade Improvement Review and all supporting information must be submitted to the Medway Planning office by 12 noon on the Wednesday before a DRC meeting.

Please email this application form and all attachments to: sachilds@townofmedway.org

Mail: Design Review Committee
c/o Medway Planning office
155 Village Street, Medway, MA 02053

Drop Off: Medway Planning office @ Medway Town Hall, 155 Village Street

Phone: 508-533-3291

Applicants and façade improvement designers should read Section 2 Commercial Zones of the Medway Design Review Guidelines before developing a façade improvement design. Façade improvement designs should be developed in accordance with the Design Guidelines.

https://www.townofmedway.org/sites/g/files/vyhlif866/f/uploads/medway_final_design_review_guidelines_-_september_2015_1.pdf

Date Application Received by Medway Planning office: _____

Reviewed by Medway Planning Coordinator: _____ ***DRC Meeting Date:*** _____

Susan Affleck-Childs

From: Kevin Bradley <kbradley@rockys.com>
Sent: Wednesday, May 26, 2021 11:13 AM
To: Susan Affleck-Childs; Joseph Buchholz; 'Lauren Cronin'; 'Todd Wilson'
Cc: Jack Mee; Matt Buckley
Subject: RE: Medway Design Review Committee meeting

Hi,

I authorize the application and designate Todd Wilson to represent Rocky's Ace Hardware in Medway Mass.

If you need anything else, please let me know.

Thank you

Kevin Bradley
Manager of Store Support
Manager of Store Maintenance
Work Safe Today!
Rocky's Ace Hardware
40 Island Pond Road
Springfield Mass 01118
413-519-3172
kbradley@rockys.com
www.rockys.com

From: Susan Affleck-Childs <sachilds@townofmedway.org>
Sent: Wednesday, May 26, 2021 10:38 AM
To: Joseph Buchholz <joeb@viewpointsign.com>; 'Lauren Cronin' <lcronin@viewpointsign.com>; Kevin Bradley <kbradley@rockys.com>; 'Todd Wilson' <TWilson@dfi.cc>
Cc: Jack Mee <jmee@townofmedway.org>; Matt Buckley <matt_buckley2@yahoo.com>
Subject: RE: Medway Design Review Committee meeting

Hi,

Thanks for the quick response.

As the application indicates that Rocky's Hardware is the applicant, the application form needs to be signed by someone from Rocky's (Kevin?). Then you need to write in that Todd Wilson will be acting as the Official Representative on behalf of Rocky's for discussions with the Design Review Committee. Please make those revisions. To make it easier, Kevin could provide an email authorizing the application and designating Todd to act in their place. I can attach that to the application.

Also, please provide the required drawing of the proposed façade improvements including details on materials, dimensions, colors, lighting, etc. This needs to be a more fully developed drawing that would provide more details than the drawing provided with the revised sign design, probably prepared by the building contractor.

Thanks.

Susy
Susan E. Affleck-Childs
Planning and Economic Development Coordinator
Town of Medway
155 Village Street
Medway, MA 02053
508-533-3291
sachilds@townofmedway.org

From: Joseph Buchholz [mailto:joeb@viewpointsign.com]
Sent: Wednesday, May 26, 2021 10:19 AM
To: Susan Affleck-Childs <sachilds@townofmedway.org>; 'Lauren Cronin' <lcronin@viewpointsign.com>; 'Kevin Bradley' <kbradley@rockys.com>; 'Todd Wilson' <TWilson@dfi.cc>
Cc: Jack Mee <jmee@townofmedway.org>; Matt Buckley <matt_buckley2@yahoo.com>
Subject: RE: Medway Design Review Committee meeting

All,
Attached is the completed form.
Please contact me with any questions or concerns.
Thank you,
Joe B

Joseph H. Buchholz, Jr.
Sales
ViewPoint Sign & Awning
joeb@viewpointsign.com
PHONE 508-393-8200 x12
MOBILE 508-524-2857
www.ViewPointSign.com

The information contained in this electronic message is confidential and proprietary, and is intended only for the use of the named recipient. If you are not the intended recipient, any dissemination, copying or disclosure of this communication is strictly prohibited. If you have received this communication in error, please notify the sender and delete this communication immediately without copying or distributing it.

From: Susan Affleck-Childs <sachilds@townofmedway.org>
Sent: Wednesday, May 26, 2021 9:36 AM
To: Lauren Cronin <lcronin@viewpointsign.com>; 'Joseph Buchholz' <joeb@viewpointsign.com>; Kevin Bradley <kbradley@rockys.com>; Todd Wilson <TWilson@dfi.cc>
Cc: Jack Mee <jmee@townofmedway.org>; Matt Buckley <matt_buckley2@yahoo.com>
Subject: FW: Medway Design Review Committee meeting

Hi Lauren,

I am writing to follow-up on my email from last week.

As I have not heard back from anyone, I will schedule the sign review for Rocky's revised sign for the June 7th Design Review Committee meeting.

Also, see highlighted text below. Rocky's needs to prepare and forward an application for façade improvement review to me by June 2 so that it can be addressed at the same DRC meeting. In this case that is particularly important as the proposed façade work and the sign are so connected. The attached application should be used.

Also, the Town is resuming live meetings of its boards and committees. So the June 7th DRC meeting is scheduled to be held at the Medway Public Library, 26 High Street at 7 pm in the conference room. Somebody representing Viewpoint and/or Rocky's should plan to attend. HOWEVER . . . legislation was proposed yesterday by Governor Baker to allow MA cities and towns to continue to use ZOOM for meetings until September 1. If and when that legislation passes, we MAY be able to use ZOOM for the June 7th meeting. Stay tuned!

Please let me know if you have any questions.

Susy Affleck-Childs

Susan E. Affleck-Childs
Planning and Economic Development Coordinator
Town of Medway
155 Village Street
Medway, MA 02053
508-533-3291
sachilds@townofmedway.org

From: Susan Affleck-Childs
Sent: Thursday, May 20, 2021 12:51 PM
To: Lauren Cronin <lcronin@viewpointsign.com>
Cc: 'Joseph Buchholz' <joeb@viewpointsign.com>; Kevin Bradley <kbradley@rockys.com>; Todd Wilson <TWilson@dfi.cc>; Jack Mee <jmee@townofmedway.org>; Matthew Buckley <matt_buckley2@yahoo.com>
Subject: RE: Medway Design Review Committee meeting

Hi Lauren,

Thanks for your email notes. It was great to receive the modified sign design.

Yes, both the revised sign design and the proposed façade improvement design need to be reviewed by the Design Review Committee before the respective permits can be issued by the Medway Building Department.

The DRC's next regularly scheduled meeting is Monday, June 7th. There is a possibility we could convene the DRC for special meeting for this project next week or the week after; I will need to check with members on their availability. Please let me know if Rocky's would like to request a special meeting or hold off to June 7th.

You do not need to submit another Sign Design Review application.

However, Rocky's/Diversifed needs to submit a Façade Improvement Review application to the Design Review Committee for the proposed storefront work. See attached application form. There is no fee for this review. This review is pursuant to recent changes to the Medway Zoning Bylaw approved at Town Meeting.

It would be ideal if we could schedule the DRC to handle these reviews at the same meeting.

Please let me know if there are any questions.

Best regards,

Susy

Susan E. Affleck-Childs
Planning and Economic Development Coordinator
Town of Medway
155 Village Street
Medway, MA 02053
508-533-3291
sachilds@townofmedway.org

From: Lauren Cronin [mailto:lcronin@viewpointsign.com]
Sent: Thursday, May 20, 2021 10:26 AM
To: Susan Affleck-Childs <sachilds@townofmedway.org>
Cc: 'Joseph Buchholz' <joeb@viewpointsign.com>
Subject: RE: Medway Design Review Committee meeting

Hi Susan –

Just wanted to let you know that I've been in contact with Barbara and Morgan, and I submitted the withdrawal form to Morgan so we should be all set.

If you could still please let me know if the Design Review Board would want to review the revised sign proposal prior to us pursuing building permits, that would be appreciated. I look forward to hearing from you. I think someone from Rocky's might be making similar inquiries, so if I'm repeating what's already been discussed with him, I apologize.

Thanks,

Lauren Cronin Delarda
Project Manager and Permit Manager
Viewpoint Sign & Awning
35 Lyman Street
Northboro, MA 01532

C: 617-872-3064
P: 508-393-8200 xt.21
F: 508-393-4244
E: LCronin@viewpointsign.com

From: Lauren Cronin [mailto:lcronin@viewpointsign.com]
Sent: Thursday, May 20, 2021 8:21 AM
To: 'Susan Affleck-Childs'
Cc: 'Joseph Buchholz'
Subject: RE: Medway Design Review Committee meeting

Hi Susan –

Hope you're doing well!
As you know, we attended the Design Review meeting on Monday... the customer has decided to withdraw our ZBA application, and revise the sign so that it is to code so we can re-apply to the building department for permits.

Can you please tell me what the process would be to withdraw our application? We understand that any costs already incurred are our responsibility. Also, will do you know if we'll need to go before the Design Review Board again with the revised proposal? If so, what would you need from us to get on their next agenda?
Feel free to call me if that's easier – my cell is 617-872-3064, otherwise email is fine

Thanks,

Lauren Cronin Delarda
Project Manager and Permit Manager
Viewpoint Sign & Awning
35 Lyman Street
Northboro, MA 01532

C: 617-872-3064
P: 508-393-8200 xt.21
F: 508-393-4244
E: LCronin@viewpointsign.com

From: Susan Affleck-Childs [mailto:sachilds@townofmedway.org]
Sent: Wednesday, May 12, 2021 10:45 AM
To: Lauren Cronin
Cc: 'Joseph Buchholz'
Subject: RE: Medway Design Review Committee meeting

Excellent. Thanks Lauren and Joe!

From: Lauren Cronin [mailto:lcronin@viewpointsign.com]
Sent: Wednesday, May 12, 2021 10:17 AM
To: Susan Affleck-Childs <sachilds@townofmedway.org>
Cc: 'Joseph Buchholz' <joeb@viewpointsign.com>
Subject: RE: Medway Design Review Committee meeting

Hi Susan –

Thanks for the phone call, I will pass this info along to Joe Buccholz with our office... as I mentioned on the phone, he's the one working directly with Rocky's, so he's a great person to have at this meeting to answer any questions or address any concerns. He will also be reaching out to Rocky's to see if they want to participate in the meeting as well.
Let me know if you need any additional information from me – I look forward to working with you in regards to this project.

Joe – attached is the agenda for the design review meeting that you and I just discussed on the phone. Let me know if you need anything else.

Thanks again,

Lauren Cronin Delarda
Project Manager and Permit Manager
Viewpoint Sign & Awning
35 Lyman Street
Northboro, MA 01532

P: 508-393-8200 xt.21
F: 508-393-4244
E: LCronin@viewpointsign.com

From: Susan Affleck-Childs [mailto:sachilds@townofmedway.org]
Sent: Wednesday, May 12, 2021 10:11 AM
To: lcronin@viewpointsign.com
Subject: Medway Design Review Committee meeting

Hi Lauren,

Good to speak with you.

Attached is the agenda for next Monday's Design Review Committee meeting. The ZOOM access information is included at the end of the agenda.

Please forward to your colleague who will attend. The appointment is scheduled for 7 pm.

Thanks for your help.

Susy Affleck-Childs

Susan E. Affleck-Childs
Planning and Economic Development Coordinator
Town of Medway
155 Village Street
Medway, MA 02053
508-533-3291
sachilds@townofmedway.org

This email has been checked for viruses by Avast antivirus software.
www.avast.com

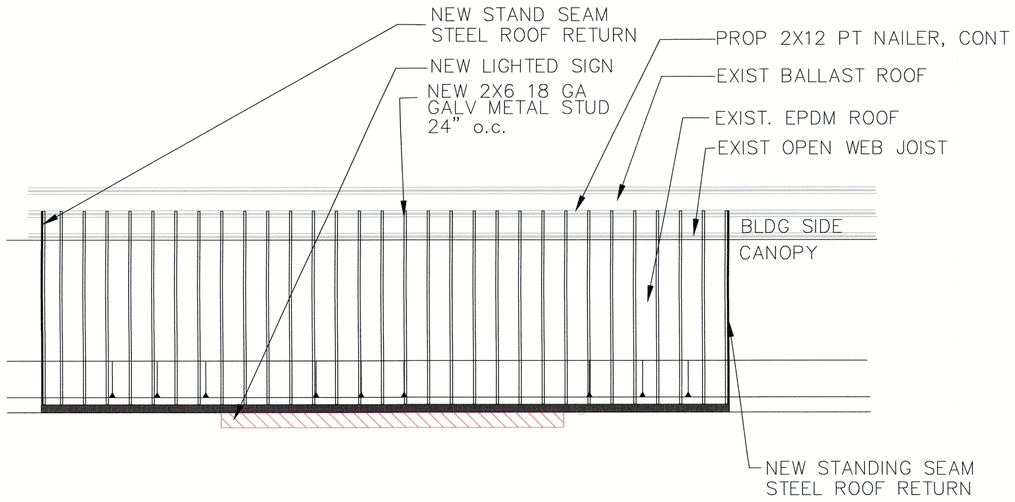

PLAN VIEW–SCALE: 1/4"= 1 FT

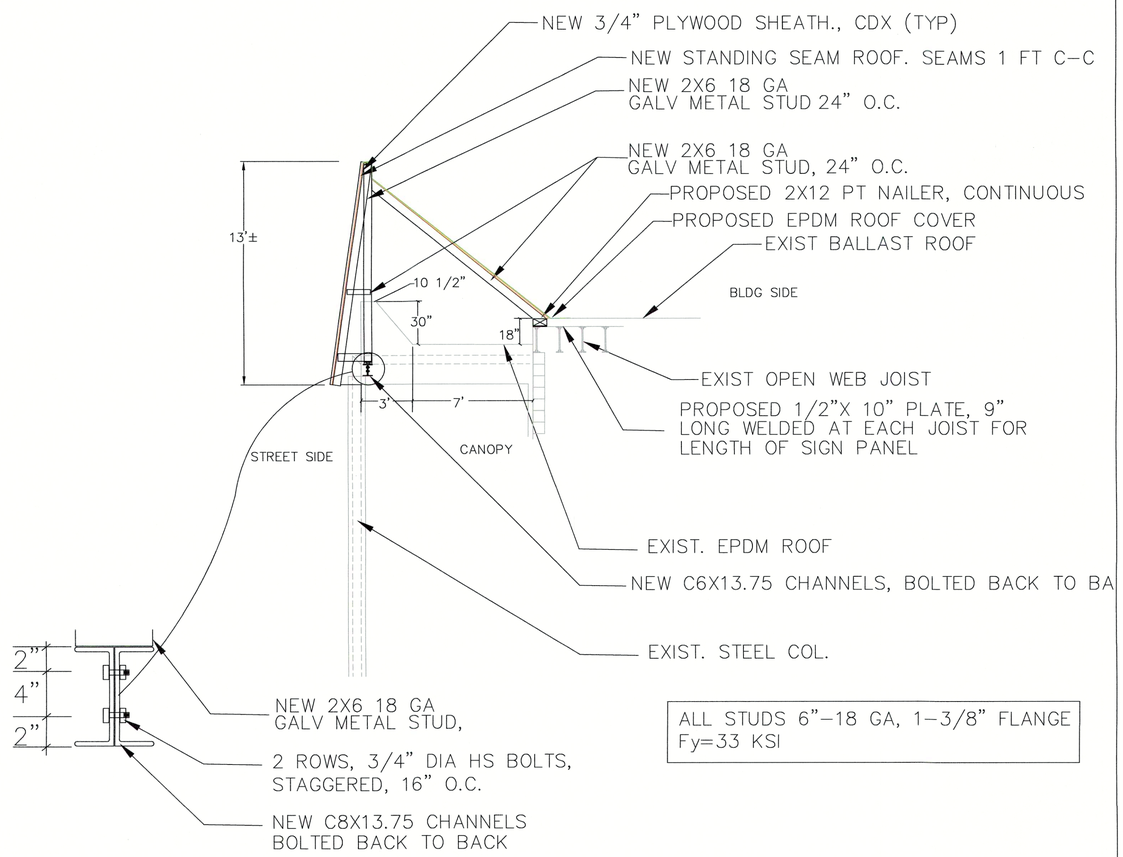

ALL STUDS 6"–18 GA, 1–3/8" FLANGE
Fy=33 KSI

SECTION VIEW–SCALE: 1/4"= 1 FT

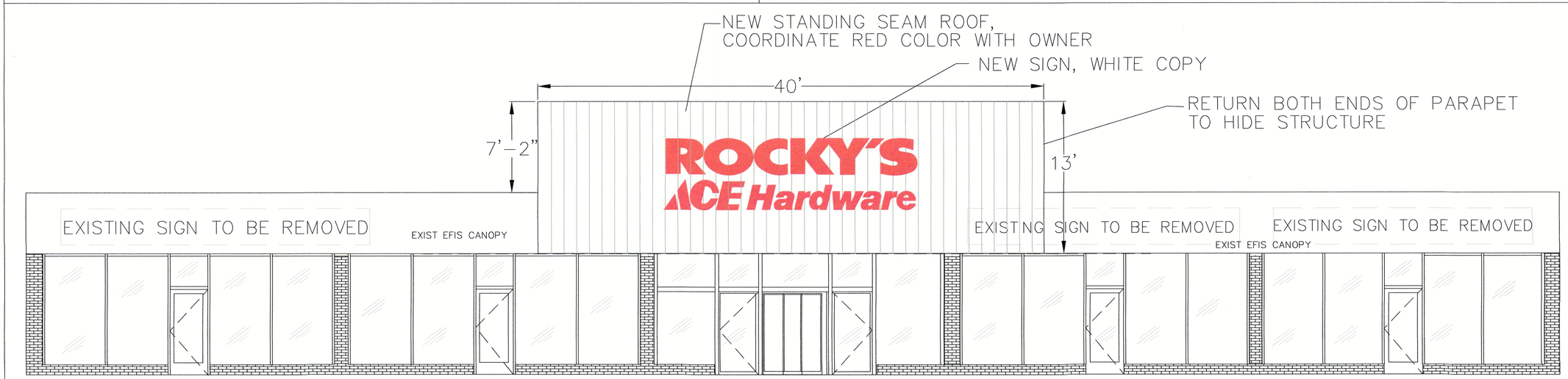

FRONT ELEVATION VIEW–SCALE: 1/4"= 1 FT

SUGRUE & ASSOC., INC.
CIVIL ENGINEERS & LAND SURVEYORS
9 THURBER BLVD, SUITE A
SMITHFIELD, R.I. 02917
(401) 647-3890 FAX (401) 647-7067

COMMONWEALTH OF MASSACHUSETTS
WILLIAM P. DREXEL
CIVIL
NO. 40601
REGISTERED PROFESSIONAL ENGINEER
5-27-21

REV. NO.	DATE	REVISION	MADE BY	CHK'D BY	APP'D BY
1	5-26-21	DATE OF ISSUE	WPD	MPS	MPS
2	5-27-21	REV'D SIGN SIZE	GMR	MPS	MPS

SCALE: AS SHOWN

ACE HARDWARE FITOUT
ROOF PLAN & DETAIL
98, 108-114 MAIN STREET
MEDWAY, MA
FOR: DIVERSIFIED FUNDING INC.
DATE: FEBRUARY 1, 2021

JOB #
DWG # SAI