RIW
RUBERTO, ISRAEL & WEINER

Christopher R. Agostino
E-mail: cra@riw.com
Direct: 617-570-3501

September 6, 2016

Via Hand Delivery and Email

Gregory P. Watson
Massachusetts Housing Finance Agency
One Beacon Street
Boston, MA 02108

Re: NOTICE OF PROJECT CHANGE – 760 CMR 56.04(5)
Timber Crest, LLC, Medway, MA, Project Eligibility Letter #746

Dear Mr. Watson:

Pursuant to 760 CMR 56.04(5), please accept this correspondence as formal notice of changes to the Timber Crest Estates comprehensive permit project. Timber Crest, LLC ("Timber Crest") respectfully requests that MassHousing confirm that the changes to Timber Crest's proposal identified on Exhibit A are not substantial. Additionally, Timber Crest asks MassHousing to reaffirm that Project Eligibility Letter #746, issued to Timber Crest on January 6, 2016, remains in full force and effect with respect to Timber Crest's modified project. The changes described in Exhibit A were precipitated by concerns of the board and neighbors regarding density, the type of housing (i.e. single-family vs. condominium) and access. Timber Crest's changes reduce the overall density of the project and improve access, all as further described on Exhibit A; therefore, Timber Crest respectfully suggests that the changes are not substantial.

Please note that Section 56.04(5) requires a determination within fifteen (15) days of this request. If there is any additional information that Timber Crest can provide in order to facilitate and expedite MassHousing's review, please do not hesitate to contact me at your convenience. While a failure to respond within the time allowed under Section 56.04(5) constitutes a determination that any proposed changes are not substantial, Timber Crest would prefer an affirmative determination in order to complete the record and move forward with the permitting process. Thank you for your assistance in this matter.

Respectfully yours,

CHRISTOPHER R. AGOSTINO

Enclosures
Cc: Timber Crest, LLC (via email only)
Medway Board of Selectmen (via email and Federal Express)
Medway Zoning Board (via email and Federal Express)
Department of Housing and Community Development (via Federal Express)

EXHIBIT A – NOTICE OF PROJECT CHANGE – DESCRIPTION OF CHANGES

1. Timber Crest's revised project plans are comprised of the following (the "Revised Plans") and are attached hereto as Exhibit A:

    a. Cover Sheet 1 of 9
    b. Existing Conditions, Sheet 2 of 9
    c. West Side Subdivision Lot Layout, Sheet 3 of 9
    d. East Side Subdivision Lot Layout, Sheet 4 of 9
    e. West Side Grading & Utility Plan, Sheet 5 of 9
    f. East Side Grading & Utility Plan, Sheet 6 of 9
    g. West & East Side Road Profiles, Sheet 7 of 9
    h. Detail Sheet, Sheet 8
    i. Detail Sheet, Sheet 9

2. The revised plans depict the addition of the property known and numbered as 165 Holliston Street (the "New Parcel") to the eastern portion of the project site. The western portion of the project site has not been altered. A copy of the deed for the New Parcel to Timber Crest, LLC is attached hereto as Exhibit B, which constitutes sufficient evidence of site control relative to the New Parcel.

3. The New Parcel consists of 7.4 acres, which therefore constitutes a 4.5% increase in the overall project site.

4. Timber Crests proposes to replace 116 of the condominiums units initially proposed with 85 single-family residences, thereby reducing the overall unit count by 16%, while increasing the overall size of the project site. This results in a decrease in overall density from 1.16 units per acre, to .92 units per acre under the revised proposal.

5. The revised proposal provides for direct access off of Holliston Street and Fairway Lane, which results in better traffic flow for both residents and emergency vehicles. The entrance off of Fern Path now only serves four homes; therefore, the new proposal also reduces the area of any permanent wetlands disturbance.

6. The West Side of the project site will remain as initially proposed to the Medway Zoning Board of Appeals. As with any comprehensive permit project plans, it is anticipated that these plans will continue to evolve as the permitting process continues; however, this filing is intended to address the inclusion of the New Parcel pursuant to 760 CMR 56.04(5).

EXHIBIT A

" TIMBER CREST ESTATES "

A PROPOSED RESIDENTIAL DEVELOPMENT IN MEDWAY, MASSACHUSETTS

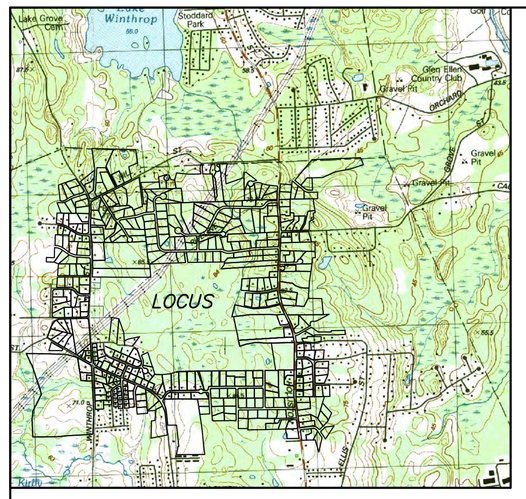

LOCUS MAP
SCALE: 1"=2000'

PLAN BY SCHOFIELD BROTHERS
DATED JUNE 8, 2006

ZONING

AGRICULTURAL & RESIDENTIAL DISTRICTS

	AR-I	AR-II	WEST SIDE	EAST SIDE
	REQUIRED	REQUIRED	PROVIDED	PROVIDED
LOT AREA	44,000 S.F.	22,500 S.F.	7,500 S.F.	5,000 S.F.
UPLAND AREA	22,000 S.F.	11,250± S.F.	7,000± S.F.	4,000± S.F.
LOT FRONTAGE	180 FEET	150 FEET	50 FEET*	50 FEET*
MIN. FRONTYARD SETBACK	35 FEET	35 FEET	20 FEET	20 FEET
MIN. SIDEYARD SETBACK	15 FEET	15 FEET	7 FEET	7 FEET
MIN. REARYARD SETBACK	15 FEET	15 FEET	10 FEET	10 FEET
SHAPE FACTOR (P^2/A)	22.0	22.0	22.0	22.0

* EXCEPT LOTS 20, 84, 120–123, 130–131, AND 143
(SEE LOTTING SHEETS FOR EXACT FRONTAGES)

NOTE: THESE ARE PRELIMINARY SUBDIVISION PLANS SUBJECT TO PERMITTING UNDER MGL CH. 40B, SECTIONS 20 TO 23.

GENERAL NOTES

1. PROPERTY LINES, WETLANDS, AND TOPOGRAPHY SHOWN HEREON IS COMPILED FROM AVAILABLE PLAN INFORMATION AS FOLLOWS:
   A. PROPERTY LINE & WETLAND INFORMATION FOR PROJECT SITE TAKEN FROM SURVEY INFORMATION PROVIDED BY COLONIAL ENGINEERING, INC. OF MEDWAY, MA. WETLANDS SHOWN HEREON AS APPROVED PER ORAD #216–821 ISSUED 9/10/14, #216–841 ISSUED 10/20/15, AND #216–859 ISSUED 12/15/15. WETLANDS ON ASSESSORS MAP 9 LOT 51 IS BASED ON FLAGGING BY GODDARD CONSULTING IN JUNE AND JULY 2016, AS LOCATED BY COLONIAL ENGINEERING.
   B. TOPOGRAPHIC INFORMATION SHOWN HEREON WAS COMPILED FROM DATA PROVIDED BY COLONIAL ENGINEERING AND LIDAR DATA FROM MASS GIS.
   C. OFFSITE PROPERTY LINES, ROADS & HOUSES COMPILED FROM MASS GIS, AND GOOGLE EARTH
   D. CERTIFIED VERNAL POOL INFORMATION TAKEN FROM ONLINE MASS GIS DATALAYER.
2. THE MAJORITY OF THE SITE IS WITHIN FLOOD ZONE "X" (AREAS DETERMINED TO BE OUTSIDE THE 0.2% ANNUAL CHANCE FLOODPLAIN) WITH A SMALL EASTERLY PORTION OF THE SITE IN OTHER FLOOD ZONE "X" (AREAS WITHIN THE 0.2% CHANCE FLOOD; AREAS OF 1% ANNUAL CHANCE FLOOD WITH AVERAGE DEPTHS OF LESS THAN 1 FOOT OR WITH DRAINAGE AREAS LESS THAN 1 SQUARE MILE; AND AREAS PROTECTED BY LEVEES FROM THE 1% ANNUAL CHANCE FLOOD) AS SHOWN ON THE FLOOD INSURANCE RATE MAP FOR MEDWAY, MA. (MAP NUMBER 25021C0141E, EFFECTIVE DATE OF JULY 17, 2012)
3. SITE IS NOT LOCATED WITHIN A ZONE II OR IWPA GROUNDWATER RESOURCE PROTECTION AREA, OR A SURFACE WATER PROTECTION AREA OR AN OUTSTANDING RESOURCE WATER (O.R.W.) PER MASS GIS.
4. THE SITE IS NOT LOCATED WITHIN A NATURAL HERITAGE AND ENDANGERED SPECIES PROGRAM (NHESP) PRIORITY HABITAT OF RARE SPECIES NOR WITHIN AN NHESP ESTIMATED HABITAT OF RARE WILDLIFE PER THE 2012 ONLINE MAPPING INFORMATION.
5. THE SITE IS NOT LOCATED WITHIN AN AREA OF CRITICAL ENVIRONMENTAL CONCERN (A.C.E.C.).
6. ALL EXISTING UTILITY INFORMATION IS APPROXIMATE ONLY AND MAY NOT BE COMPLETE, COMPILED FROM DATA PRIVIDED BY COLONIAL ENGINEERING AND AS–BUILTS OF VARIOUS ROADWAY PLANS PROVIDED BY MEDWAY DEPARTMENT OF PUBLIC SERVICES. CONTRACTORS SHALL NOTIFY DIGSAFE (1–888–344–7233) AT LEAST 72 HOURS PRIOR TO THE ONSET OF ANY CONSTRUCTION TO HAVE ALL EXISTING UTILITIES LOCATED AND CLEARLY MARKED.

INDEX

SHEET	DESCRIPTION
1	COVER SHEET
2	EXISTING CONDITIONS
3	WEST SIDE SUBDIVISION LOT LAYOUT
4	EAST SIDE SUBDIVISION LOT LAYOUT
5	WEST SIDE GRADING & UTILITY PLANS
6	EAST SIDE GRADING & UTILITY PLANS
7	WEST & EAST SIDE ROAD PROFILES
8–9	DETAILS SHEETS

REVISIONS

NO.	DATE	DESCRIPTION

OWNERS

WICKETT DEVELOPMENT INC.
38746 CLINTON AVENUE
DADE CITY, FL 33525
ASSESSORS MAP 8, LOT 16 &
MAP 9, LOT 58

HENRY L. WICKETT
38746 CLINTON AVENUE
DADE CITY, FL 33525
ASSESSORS MAP 8, LOTS 19 & 20,
ASSESSORS MAP 9, LOT 6

HENRY L. WICKETT &
HENRY L. WICKETT JR.
38746 CLINTON AVENUE
DADE CITY, FL 33525
ASSESSORS MAP 14, LOT 5

NOVUS HOMES LLC.
400 FOXBORO BLVD. UNIT 8306
FOXBOROUGH, MA 02035
ASSESSORS MAP 14, LOT 20

TIMBER CREST ESTATES LLC
C/O MOUNIR TAYARA
135 MAIN STREET, SUITE 5
MEDWAY MA, 02053
ASSESSORS MAP 15, LOT 1
ASSESSORS MAP 9, LOT 51

DOROTHY PAVLIK, ET AL
134 HOLLISTON STREET
MEDWAY, MA 02053
ASSESSORS MAP 15, LOT 19

APPLICANT

TIMBER CREST ESTATES LLC
c/o MOUNIR TAYARA
135 MAIN STREET, SUITE 5
MEDWAY MA, 02053

COMPREHENSIVE PERMIT PLANS
"TIMBER CREST ESTATES"
OFF
WINTHROP STREET, OHLSON CIRCLE, HOLLISTON STREET, FAIRWAY LANE & FERN PATH
IN
MEDWAY
MASSACHUSETTS

Outback Engineering Incorporated
165 EAST GROVE STREET
MIDDLEBOROUGH, MA 02346
TEL: (508)–946–9231
FAX: (508)–947–8873
www.outback-eng.com

DATE: AUGUST 26, 2016
DRAWN BY: CJV | CHECKED BY: JAP
SCALE: 1"=200' | SHEET 1 OF 9
0' 200' 400' 600'

OE–2765

PROJECT LOT COVERAGE

	WEST SIDE SUBDIVISION	EAST SIDE SUBDIVISION	TOTAL
# OF HOMES	72	85	157
ROOF AREA	147166 ft^2	138019 ft^2	285185 ft^2 = 6.55 ac
ROAD LENGTH	4299.3 ft	4814 ft	9113.3 ft
PAVED ROAD AND SIDEWALK AREA	146255 ft^2	168161 ft^2	314416 ft^2 = 7.22 ac
DRIVEWAY AREA	52400 ft^2	54200 ft^2	106600 ft^2 2.45 ac
TOTAL LOT AREA	1,028,332 ft^2 = 23.61 ac	744936 ft^2 = 17.26 ac	40.87 ac
EXISTING GAS & ELECTRIC EASEMENT AREA	–	–	12.29 ac
UPLAND AREA	–	–	84.27 ac
WETLAND AREA	–		86.09 ac

TOTAL PROJECT AREA = 170.36 ac

TOTAL IMPERVIOUS COVERAGE = $\frac{6.55 \text{ ac} + 7.22 \text{ ac} + 2.45 \text{ ac}}{170.36 \text{ ac}} \times 100\% = 9.52\%$

PROJECT SUMMARY

PROPOSED USE: MGL CHAPTER 40B RESIDENTIAL DEVELOPMENT
157 SINGLE FAMILY LOTS
WATER & SEWER DEMAND: 157 HOMES X 3 BEDROOMS EACH X 110 GPD PER BEDROOM =51,810 GALLONS PER DAY TOTAL

PARKING DIMENSIONS PER ZONING BY–LAW SECTION H.7
STANDARD 9' X 18', PARALLEL 8' X 22', COMPACT 8' X 15'

NOTE: PER H.3, PARKING REQUIRMENTS NOT APPLICABLE TO SINGLE AND TWO FAMILY RESIDENCES.

PARKING PROVIDED: MIN 1–2 SPACES/ HOME + GARAGES

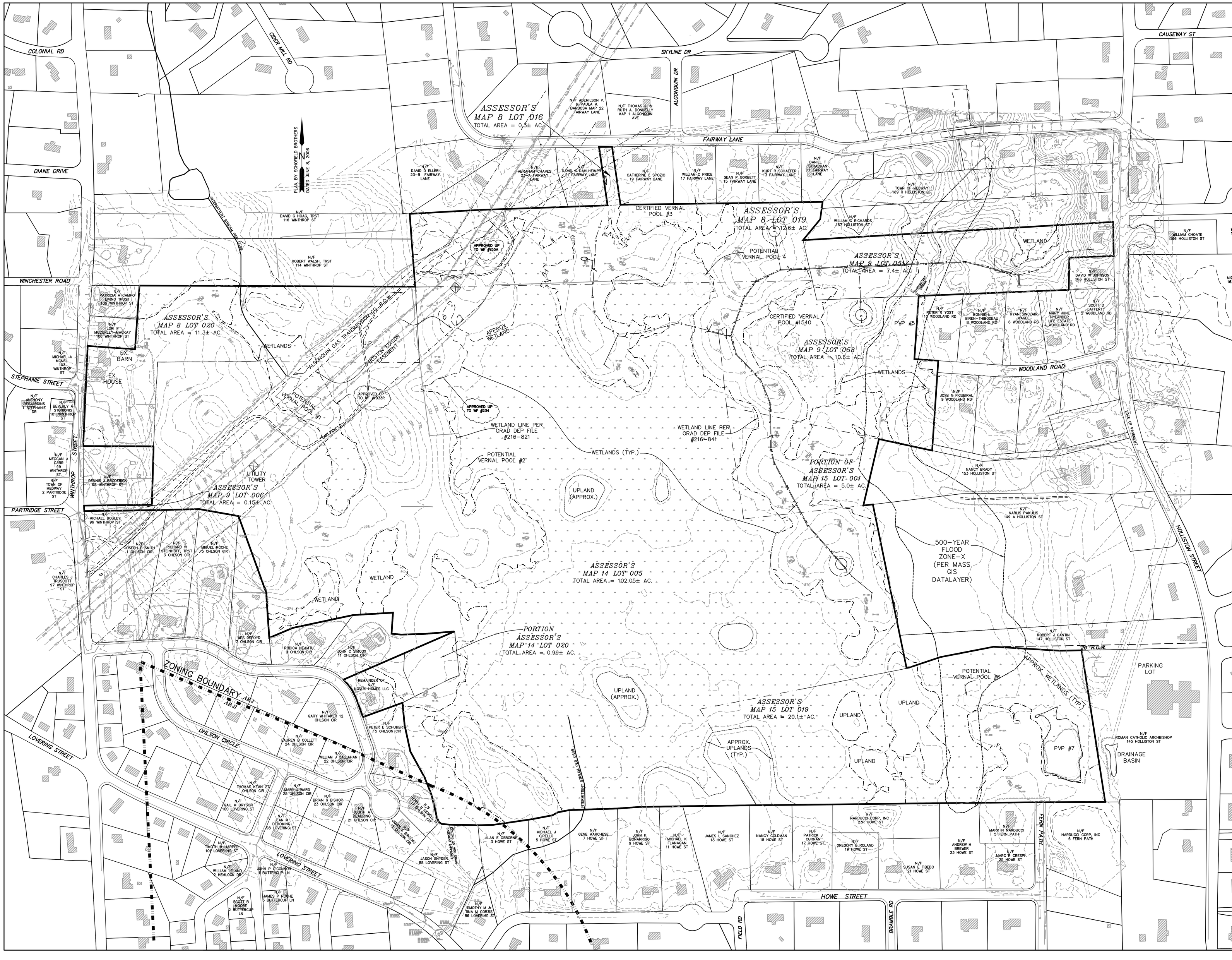

ELEVATION DATUM: N.G.V.D. 1929

PROPERTY LINES, WETLANDS, AND TOPOGRAPHY SHOWN HEREON IS COMPILED FROM AVAILABLE PLAN INFORMATION AS FOLLOWS:

A. PROPERTY LINE & WETLAND INFORMATION FOR PROJECT SITE TAKEN FROM SURVEY INFORMATION PROVIDED BY COLONIAL ENGINEERING, INC. OF MEDWAY, MA.
B. TOPOGRAPHIC INFORMATION SHOWN HEREON WAS COMPILED FROM DATA PROVIDED BY COLONIAL ENGINEERING AND LIDAR DATA FROM MASS GIS.
C. OFFSITE PROPERTY LINES, ROADS & HOUSES COMPILED FROM MASS GIS, AND GOOGLE EARTH
D. VERNAL POOL LOCATION BASED ON FIELD DELINEATION BY GODDARD CONSULTING AND LOCATED BY COLONIAL ENGINEERING.

REVISIONS

NO.	DATE	DESCRIPTION

OWNERS

WICKETT DEVELOPMENT INC.
38746 CLINTON AVENUE
DADE CITY, FL 33525
ASSESSORS MAP 8, LOT 16 & MAP 9, LOT 58

HENRY L. WICKETT
38746 CLINTON AVENUE
DADE CITY, FL 33525
ASSESSORS MAP 8, LOTS 19 & 20, ASSESSORS MAP 9, LOT 6

HENRY L. WICKETT & HENRY L. WICKETT JR.
38746 CLINTON AVENUE
DADE CITY, FL 33525
ASSESSORS MAP 14, LOT 5

NOVUS HOMES LLC.
400 FOXBORO BLVD. UNIT 8306
FOXBOROUGH, MA 02035
ASSESSORS MAP 14, LOT 20

TIMBER CREST ESTATES LLC
C/O MOUNIR TAYARA
135 MAIN STREET, SUITE 5
MEDWAY MA, 02053
ASSESSORS MAP 15, LOT 1
ASSESSORS MAP 9, LOT 51

DOROTHY PAVLIK, ET AL
134 HOLLISTON STREET
MEDWAY, MA 02053
ASSESSORS MAP 15, LOT 19

APPLICANT

TIMBER CREST ESTATES LLC
c/o MOUNIR TAYARA
135 MAIN STREET, SUITE 5
MEDWAY MA, 02053

EXISTING CONDITIONS "TIMBER CREST ESTATES" OFF WINTHROP STREET, OHLSON CIRCLE, HOLLISTON STREET, FAIRWAY LANE & FERN PATH IN MEDWAY MASSACHUSETTS

Outback Engineering Incorporated
165 EAST GROVE STREET
MIDDLEBOROUGH, MA 02346
TEL: (508)-946-9231
FAX: (508)-947-8873
www.outback-eng.com

DATE: AUGUST 26, 2016
DRAWN BY: CJV | CHECKED BY: JAP
SCALE: 1"=140' | SHEET 2 OF 9
0' 140' 280' 420'

OE-2765

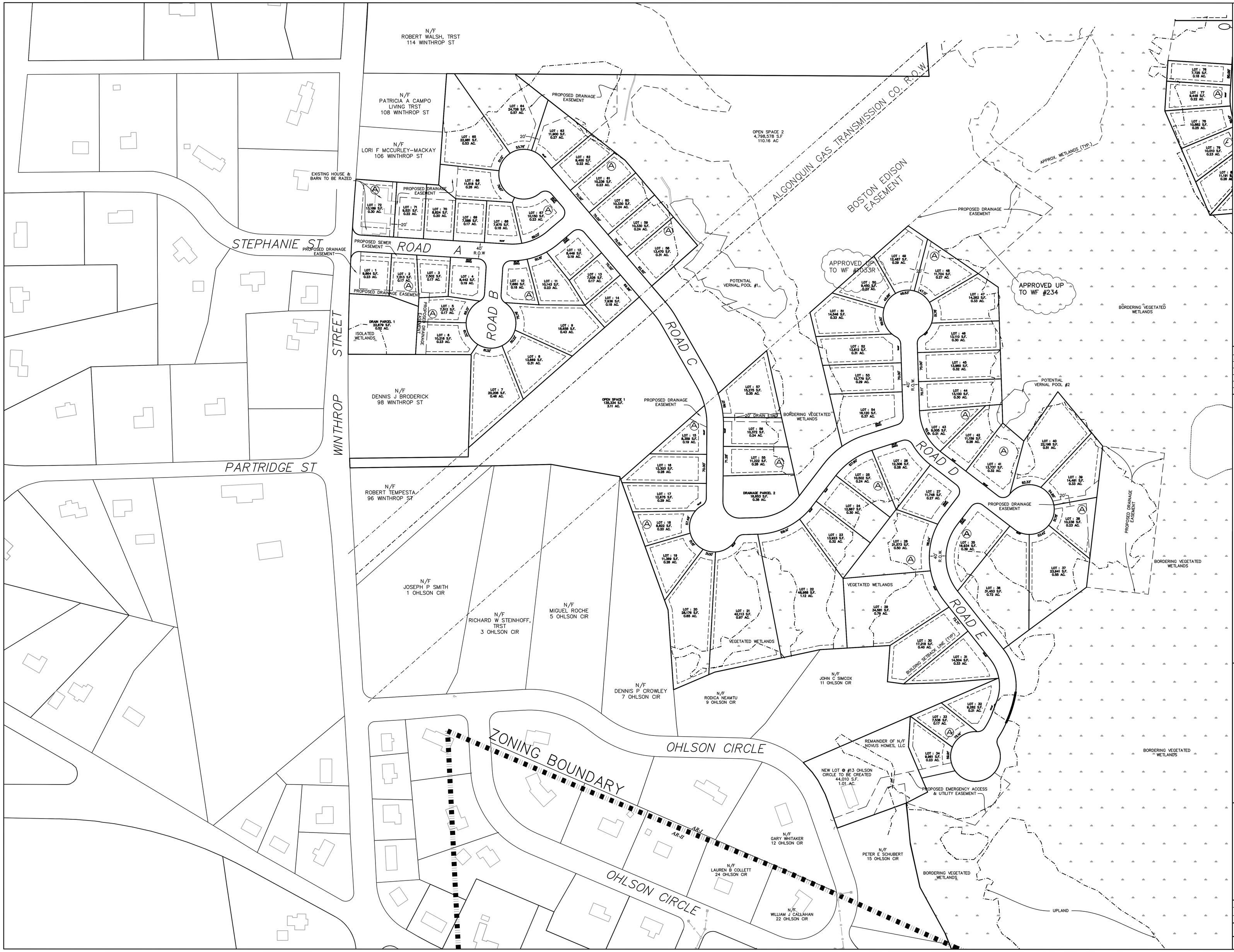

REVISIONS

NO.	DATE	DESCRIPTION

OWNERS

WICKETT DEVELOPMENT INC.
38746 CLINTON AVENUE
DADE CITY, FL 33525
ASSESSORS MAP 8, LOT 16 &
MAP 9, LOT 58

HENRY L. WICKETT
38746 CLINTON AVENUE
DADE CITY, FL 33525
ASSESSORS MAP 8, LOTS 19 & 20,
ASSESSORS MAP 9, LOT 6

HENRY L. WICKETT &
HENRY L. WICKETT JR.
38746 CLINTON AVENUE
DADE CITY, FL 33525
ASSESSORS MAP 14, LOT 5

NOVUS HOMES LLC.
400 FOXBORO BLVD. UNIT 8306
FOXBOROUGH, MA 02035
ASSESSORS MAP 14, LOT 20

TIMBER CREST ESTATES LLC
C/O MOUNIR TAYARA
135 MAIN STREET, SUITE 5
MEDWAY MA, 02053
ASSESSORS MAP 15, LOT 1
ASSESSORS MAP 9, LOT 51

DOROTHY PAVLIK, ET AL
134 HOLLISTON STREET
MEDWAY, MA 02053
ASSESSORS MAP 15, LOT 19

APPLICANT

TIMBER CREST ESTATES LLC
c/o MOUNIR TAYARA
135 MAIN STREET, SUITE 5
MEDWAY MA, 02053

LOT LAYOUT SHEET WEST SIDE SUBDIVISION "TIMBER CREST ESTATES" OFF WINTHROP STREET, OHLSON CIRCLE, HOLLISTON STREET, FAIRWAY LANE & FERN PATH IN MEDWAY MASSACHUSETTS

Outback Engineering Incorporated

165 EAST GROVE STREET
MIDDLEBOROUGH, MA 02346
TEL: (508)-946-9231
FAX: (508)-947-8873
www.outback-eng.com

DATE: AUGUST 26, 2016
DRAWN BY: CVJ | CHECKED BY: JAP
SCALE: 1"=80' | SHEET 3 OF 9
0' 80' 160' 240'

OE-2765

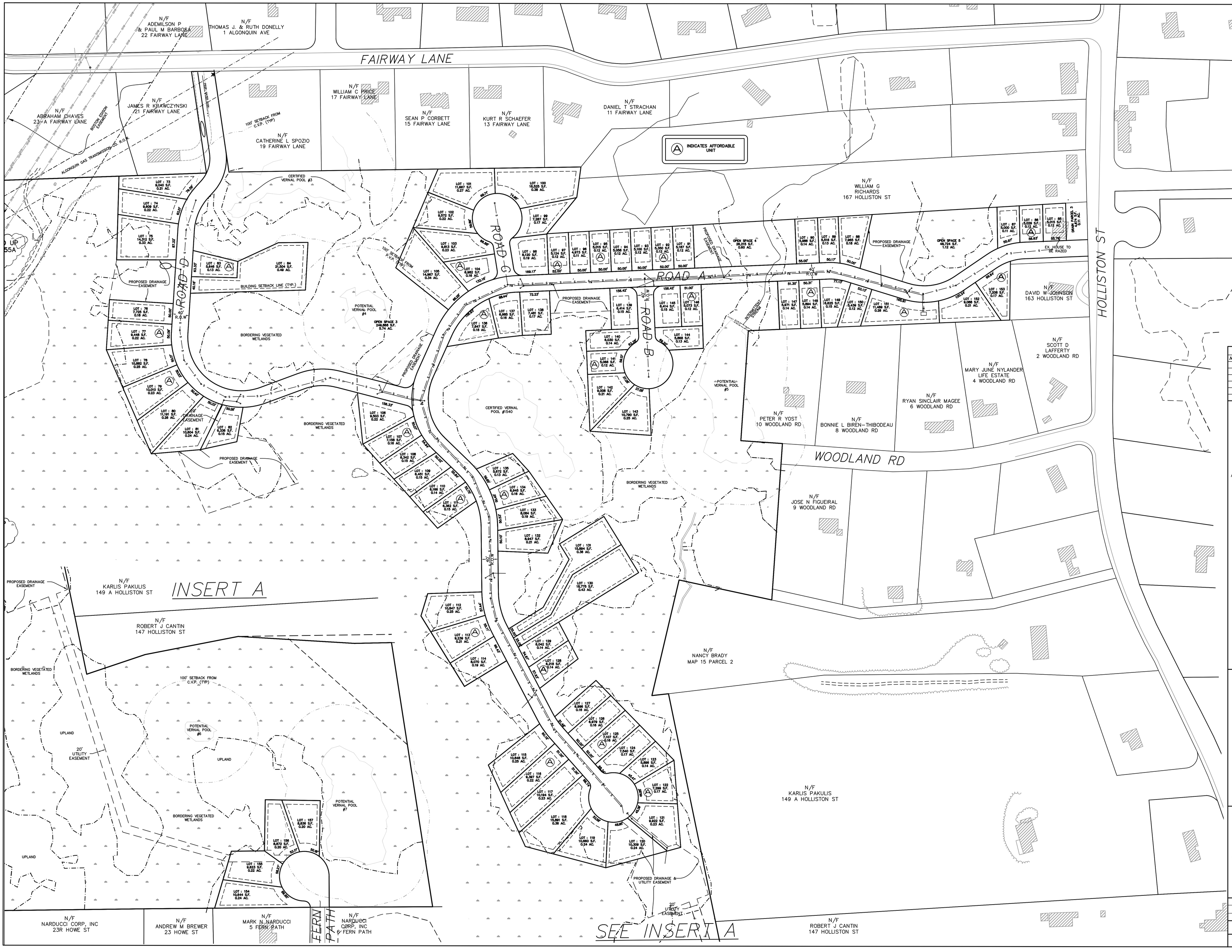

REVISIONS

NO.	DATE	DESCRIPTION

OWNERS

WICKETT DEVELOPMENT INC.
38746 CLINTON AVENUE
DADE CITY, FL 33525
ASSESSORS MAP 8, LOT 16 &
MAP 9, LOT 58

HENRY L. WICKETT
38746 CLINTON AVENUE
DADE CITY, FL 33525
ASSESSORS MAP 8, LOTS 19 & 20,
ASSESSORS MAP 9, LOT 6

HENRY L. WICKETT &
HENRY L. WICKETT JR.
38746 CLINTON AVENUE
DADE CITY, FL 33525
ASSESSORS MAP 14, LOT 5

NOVUS HOMES LLC.
400 FOXBORO BLVD. UNIT 8306
FOXBOROUGH, MA 02035
ASSESSORS MAP 14, LOT 20

TIMBER CREST ESTATES LLC
C/O MOUNIR TAYARA
135 MAIN STREET, SUITE 5
MEDWAY MA, 02053
ASSESSORS MAP 15, LOT 1
ASSESSORS MAP 9, LOT 51

DOROTHY PAVLIK, ET AL
134 HOLLISTON STREET
MEDWAY, MA 02053
ASSESSORS MAP 15, LOT 19

APPLICANT

TIMBER CREST ESTATES LLC
c/o MOUNIR TAYARA
135 MAIN STREET, SUITE 5
MEDWAY MA, 02053

LOT LAYOUT SHEET EAST SIDE SUBDIVISION "TIMBER CREST ESTATES" OFF WINTHROP STREET, OHLSON CIRCLE, HOLLISTON STREET, FAIRWAY LANE & FERN PATH IN MEDWAY MASSACHUSETTS

Outback Engineering Incorporated
165 EAST GROVE STREET
MIDDLEBOROUGH, MA 02346
TEL: (508)-946-9231
FAX: (508)-947-8873
www.outback-eng.com

DATE: AUGUST 26, 2016
DRAWN BY: CJV | CHECKED BY: JAP
SCALE: 1"=80' | SHEET 4 OF 9
80' 160' 240'

OE-2765

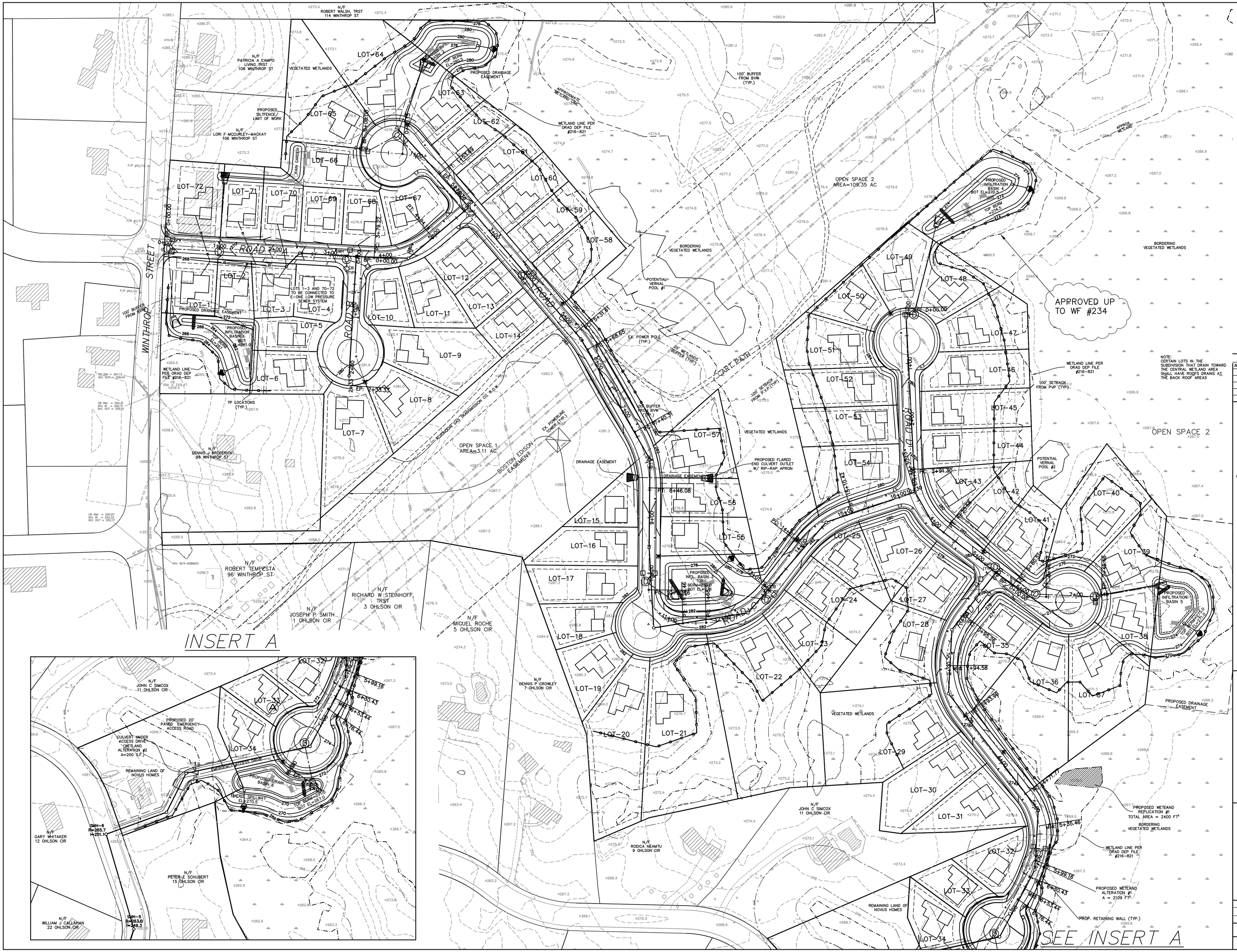

REVISIONS

NO.	DATE	DESCRIPTION

OWNERS

WICKETT DEVELOPMENT INC.
38746 CLINTON AVENUE
DADE CITY, FL 33525
ASSESSORS MAP 8, LOT 16 & MAP 9, LOT 58

HENRY L. WICKETT
38746 CLINTON AVENUE
DADE CITY, FL 33525
ASSESSORS MAP 8, LOTS 19 & 20, ASSESSORS MAP 9, LOT 6

HENRY L. WICKETT &
HENRY L. WICKETT JR.
38746 CLINTON AVENUE
DADE CITY, FL 33525
ASSESSORS MAP 14, LOT 5

NOVUS HOMES LLC.
400 FOXBORO BLVD. UNIT 8306
FOXBOROUGH, MA 02035
ASSESSORS MAP 14, LOT 20

TIMBER CREST ESTATES LLC
C/O MOUNIR TAYARA
135 MAIN STREET, SUITE 5
MEDWAY MA, 02053
ASSESSORS MAP 15, LOT 1
ASSESSORS MAP 9, LOT 51

DOROTHY PAVLIK, ET AL
134 HOLLISTON STREET
MEDWAY, MA 02053
ASSESSORS MAP 15, LOT 19

APPLICANT

TIMBER CREST ESTATES LLC
c/o MOUNIR TAYARA
135 MAIN STREET, SUITE 5
MEDWAY MA, 02053

GRADING & UTILITY SHEET "TIMBER CREST ESTATES" OFF WINTHROP STREET, OHLSON CIRCLE, HOLLISTON STREET, FAIRWAY LANE & FERN PATH IN MEDWAY MASSACHUSETTS

Outback Engineering Incorporated
165 EAST GROVE STREET
MIDDLEBOROUGH, MA 02346
TEL: (508)-946-9231
FAX: (508)-947-8873
www.outback-eng.com

DATE: AUGUST 26, 2016
DRAWN BY: CJV | CHECKED BY: JAP
SCALE: 1"=60' | SHEET 5 OF 9
0' 60' 120' 180'

OE-2765

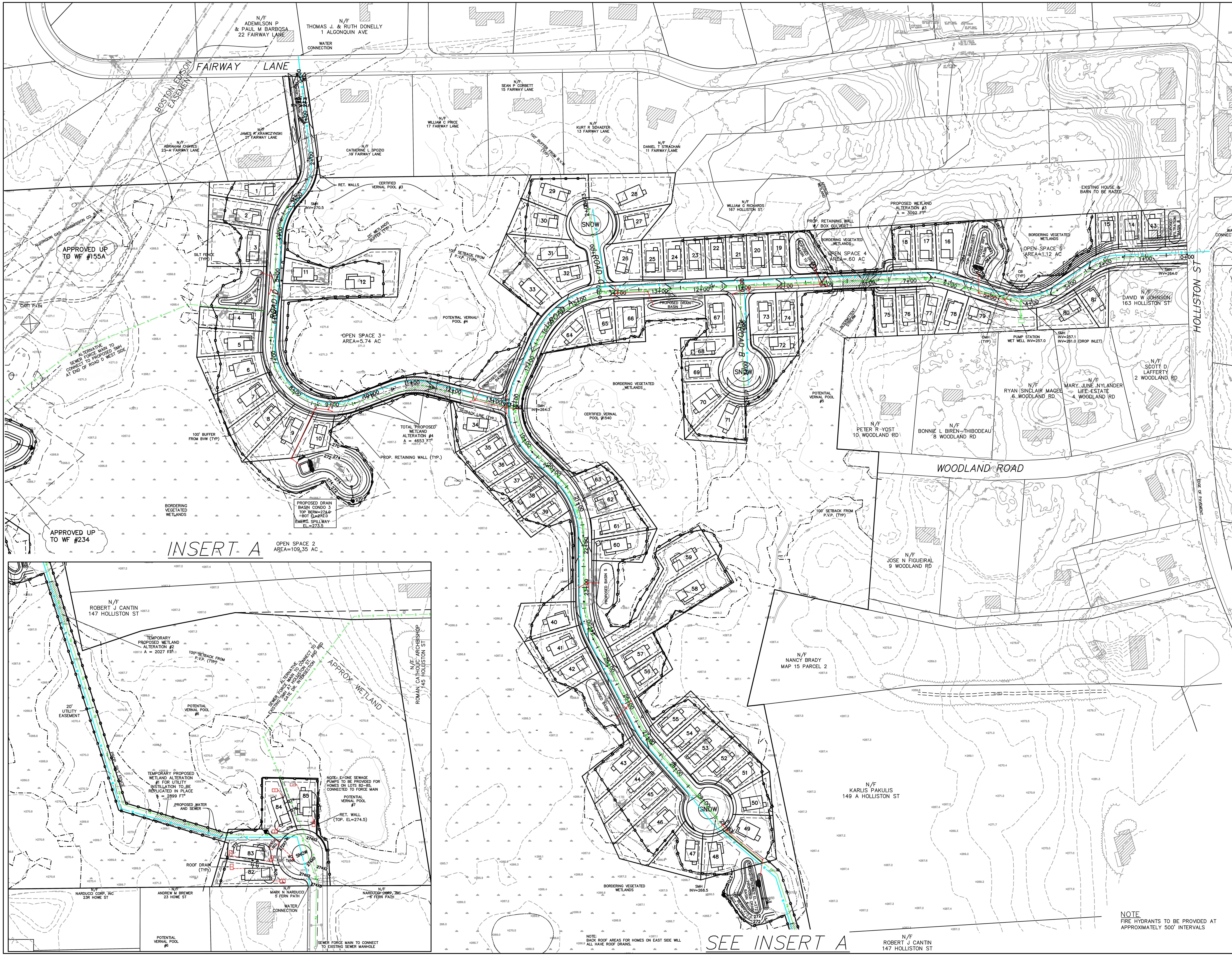

NOTE
FIRE HYDRANTS TO BE PROVIDED AT APPROXIMATELY 500' INTERVALS

PLAN BY SCHOFIELD BROTHERS
DATED JUNE 8, 2006

REVISIONS

NO.	DATE	DESCRIPTION

OWNERS

WICKETT DEVELOPMENT INC.
38746 CLINTON AVENUE
DADE CITY, FL 33525
ASSESSORS MAP 8, LOT 16 & MAP 9, LOT 58

HENRY L. WICKETT
38746 CLINTON AVENUE
DADE CITY, FL 33525
ASSESSORS MAP 8, LOTS 19 & 20,
ASSESSORS MAP 9, LOT 6

HENRY L. WICKETT &
HENRY L. WICKETT JR.
38746 CLINTON AVENUE
DADE CITY, FL 33525
ASSESSORS MAP 14, LOT 5

NOVUS HOMES LLC.
400 FOXBORO BLVD. UNIT 8306
FOXBOROUGH, MA 02035
ASSESSORS MAP 14, LOT 20

TIMBER CREST ESTATES LLC
C/O MOUNIR TAYARA
135 MAIN STREET, SUITE 5
MEDWAY MA, 02053
ASSESSORS MAP 15, LOT 1
ASSESSORS MAP 9, LOT 51

DOROTHY PAVLIK, ET AL
134 HOLLISTON STREET
MEDWAY, MA 02053
ASSESSORS MAP 15, LOT 19

APPLICANT

TIMBER CREST ESTATES LLC
c/o MOUNIR TAYARA
135 MAIN STREET, SUITE 5
MEDWAY MA, 02053

GRADING & UTILITY SHEET-EAST
"TIMBER CREST ESTATES"
OFF
WINTHROP STREET, OHLSON CIRCLE, HOLLISTON STREET, FAIRWAY LANE & FERN PATH
IN
MEDWAY
MASSACHUSETTS

Outback Engineering Incorporated
165 EAST GROVE STREET
MIDDLEBOROUGH, MA 02346
TEL: (508)-946-9231
FAX: (508)-947-8873
www.outback-eng.com

DATE: AUGUST 26, 2016
DRAWN BY: CJV | CHECKED BY: JAP
SCALE: 1"=80' | SHEET 6 OF 9
0' 80' 160' 240'

OE-2765

WEST SIDE SUBDIVISION PROFILES

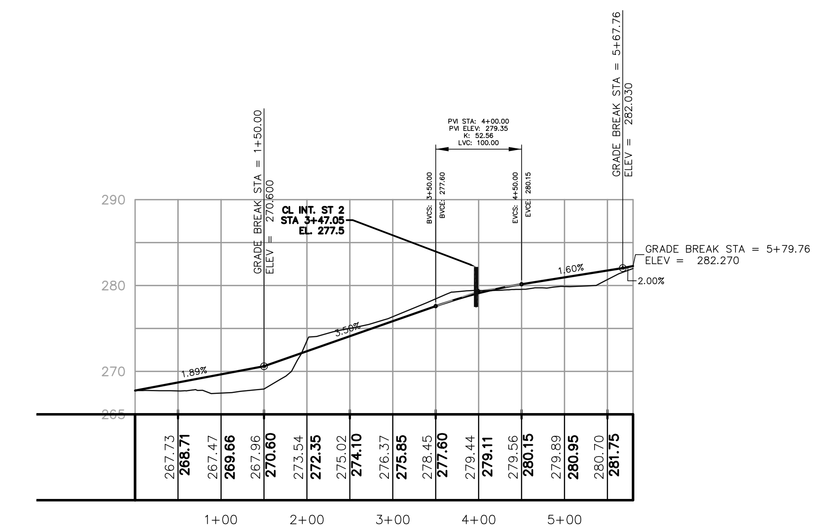

ROAD A PROFILE
SCALE: 1"=100' H 1"=10' V

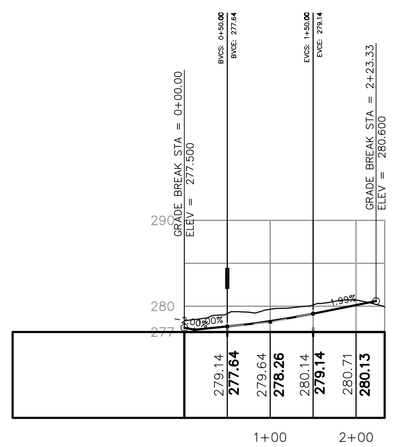

ROAD B PROFILE
SCALE: 1"=100' H 1"=10' V

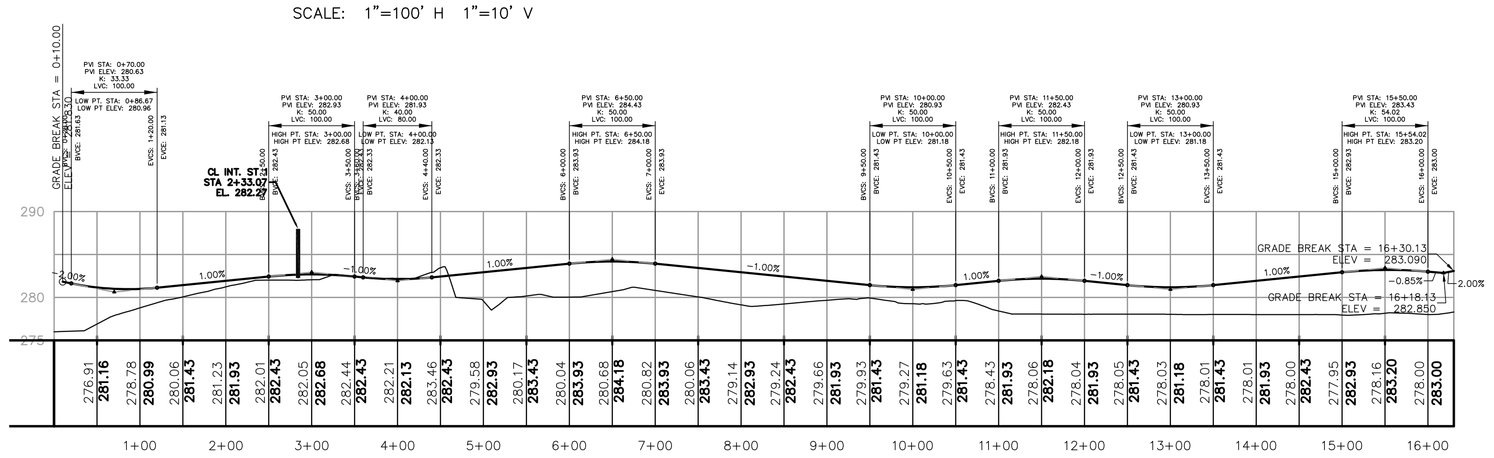

ROAD C PROFILE
SCALE: 1"=100' H 1"=10' V

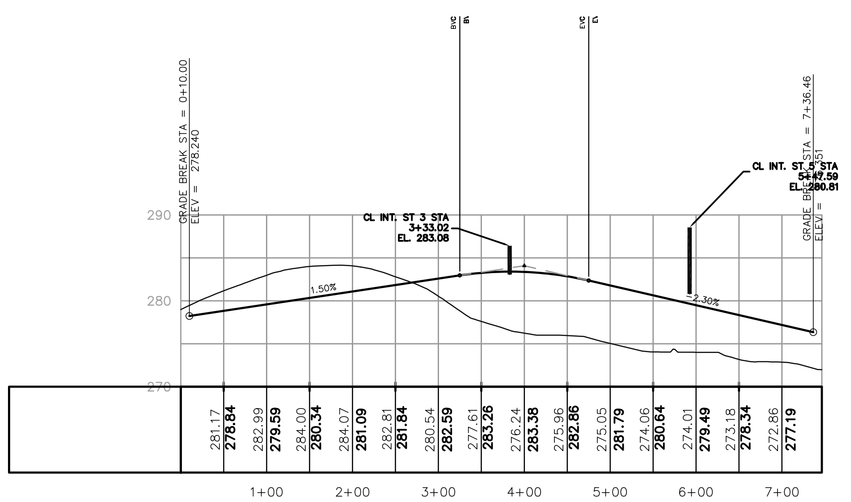

ROAD D PROFILE
SCALE: 1"=100' H 1"=10' V

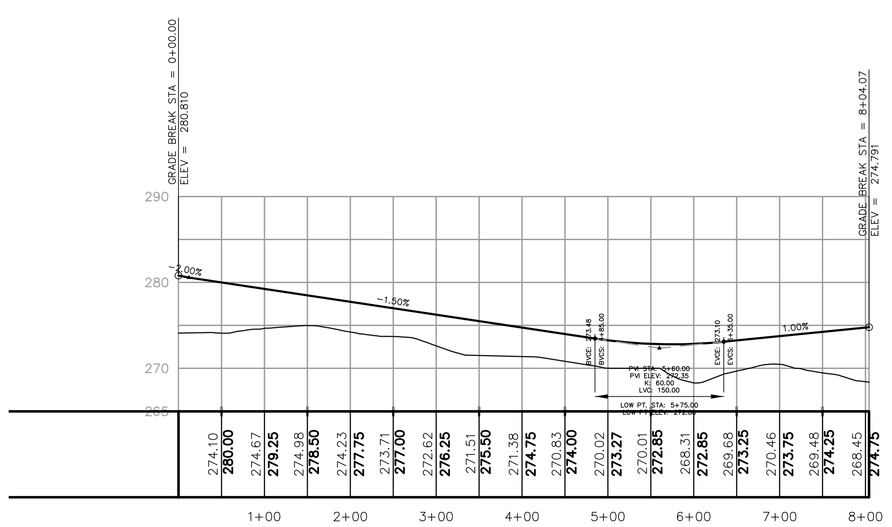

ROAD E PROFILE
SCALE: 1"=100' H 1"=10' V

EAST SIDE SUBDIVISION PROFILES

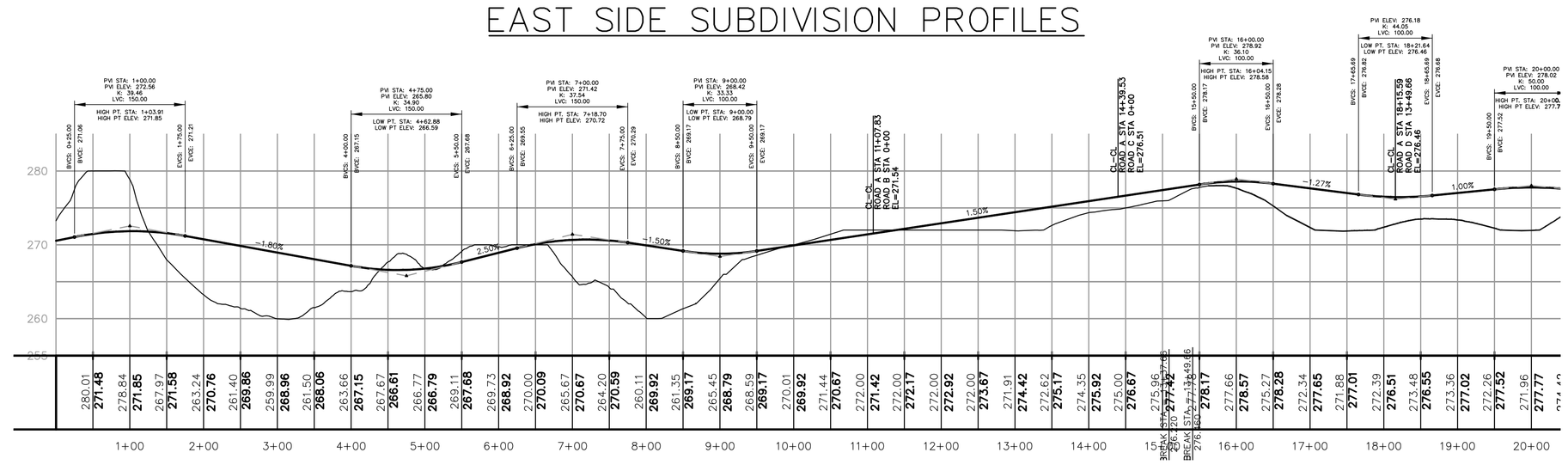

ROAD A PROFILE
SCALE: 1"=100' H 1"=10' V

NOTE: GRAVITY SEWER NOT SHOWN

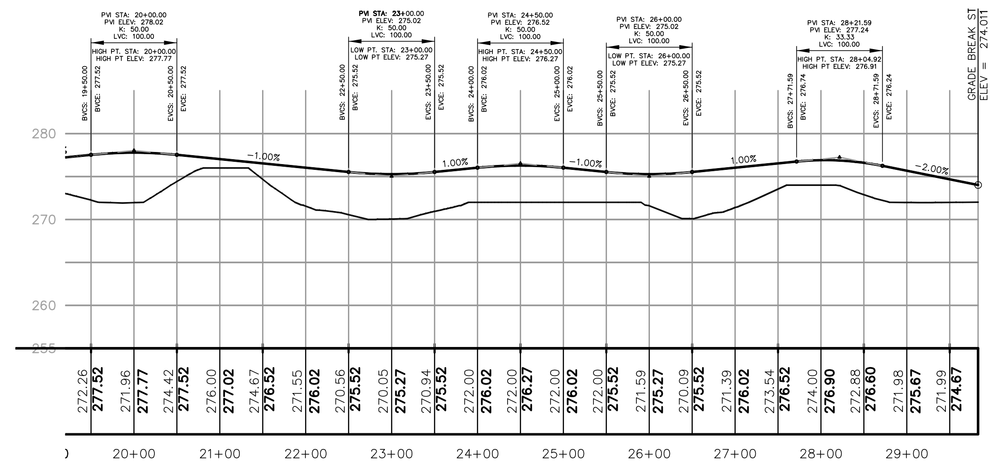

ROAD A PROFILE (CONT.)
SCALE: 1"=100' H 1"=10' V

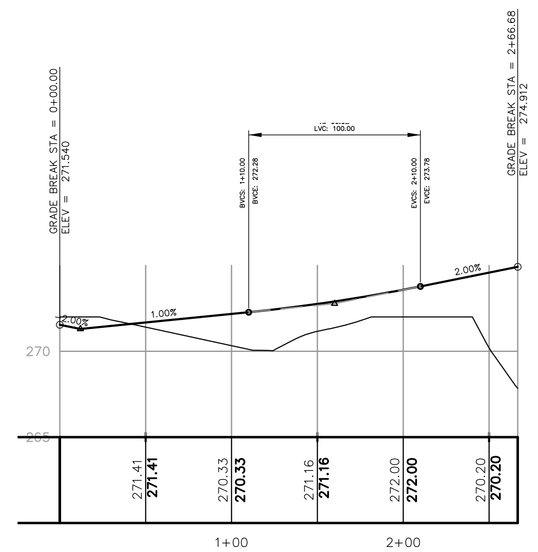

ROAD B
SCALE: 1"=50' H 1"=10' V

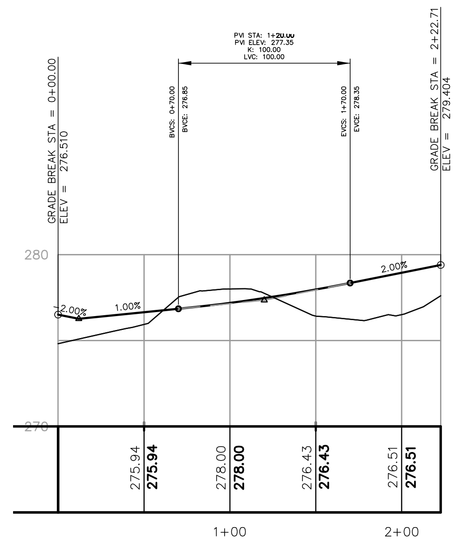

CUL DE SAC ROAD C
SCALE: 1"=50' H 1"=10' V

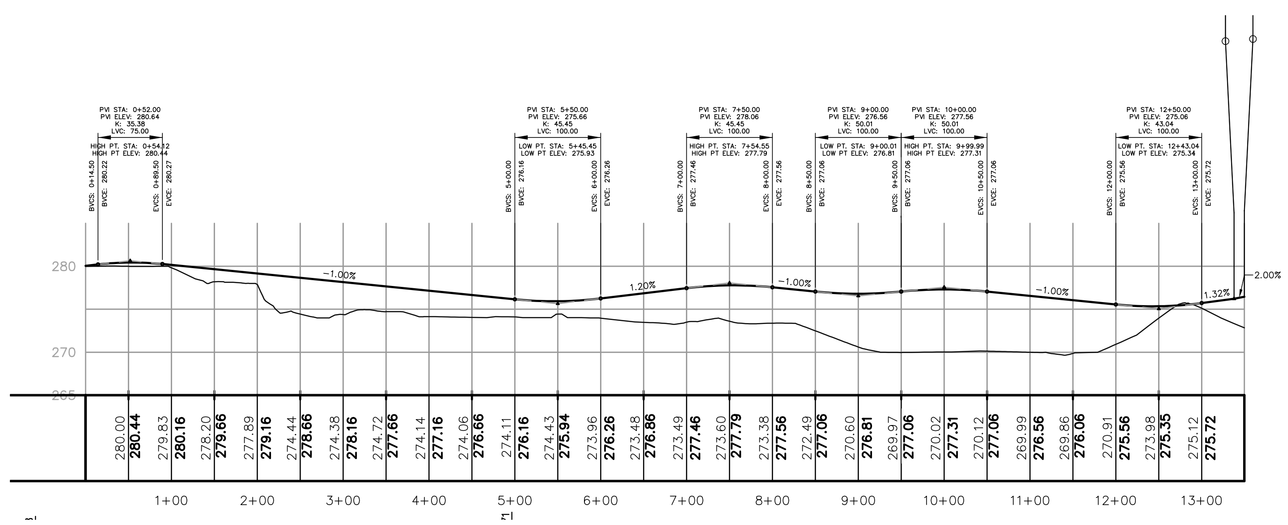

ROAD D PROFILE
SCALE: 1"=100' H 1"=10' V

REVISIONS		
NO.	DATE	DESCRIPTION

OWNERS

WICKETT DEVELOPMENT INC.
38746 CLINTON AVENUE
DADE CITY, FL 33525
ASSESSORS MAP 8, LOT 16 &
MAP 9, LOT 58

HENRY L. WICKETT
38746 CLINTON AVENUE
DADE CITY, FL 33525
ASSESSORS MAP 8, LOTS 19 & 20,
ASSESSORS MAP 9, LOT 6

HENRY L. WICKETT &
HENRY L. WICKETT JR.
38746 CLINTON AVENUE
DADE CITY, FL 33525
ASSESSORS MAP 14, LOT 5

NOVUS HOMES LLC.
400 FOXBORO BLVD. UNIT 8306
FOXBOROUGH, MA 02035
ASSESSORS MAP 14, LOT 20

TIMBER CREST ESTATES LLC
C/O MOUNIR TAYARA
135 MAIN STREET, SUITE 5
MEDWAY MA, 02053
ASSESSORS MAP 15, LOT 1
ASSESSORS MAP 9, LOT 51

DOROTHY PAVLIK, ET AL
134 HOLLISTON STREET
MEDWAY, MA 02053
ASSESSORS MAP 15, LOT 19

APPLICANT

TIMBER CREST ESTATES LLC
c/o MOUNIR TAYARA
135 MAIN STREET, SUITE 5
MEDWAY MA, 02053

SUBDIVISION PROFILE SHEET "TIMBER CREST ESTATES" OFF WINTHROP STREET, OHLSON CIRCLE, HOLLISTON STREET, FAIRWAY LANE & FERN PATH IN MEDWAY MASSACHUSETTS

Outback Engineering Incorporated
165 EAST GROVE STREET
MIDDLEBOROUGH, MA 02346
TEL: (508)-946-9231
FAX: (508)-947-8873
www.outback-eng.com

DATE: AUGUST 26, 2016
DRAWN BY: CJV | CHECKED BY: JAP
SCALE: 1"=100' | SHEET 7 OF 9
0' 100' 200' 300'

OE-2765

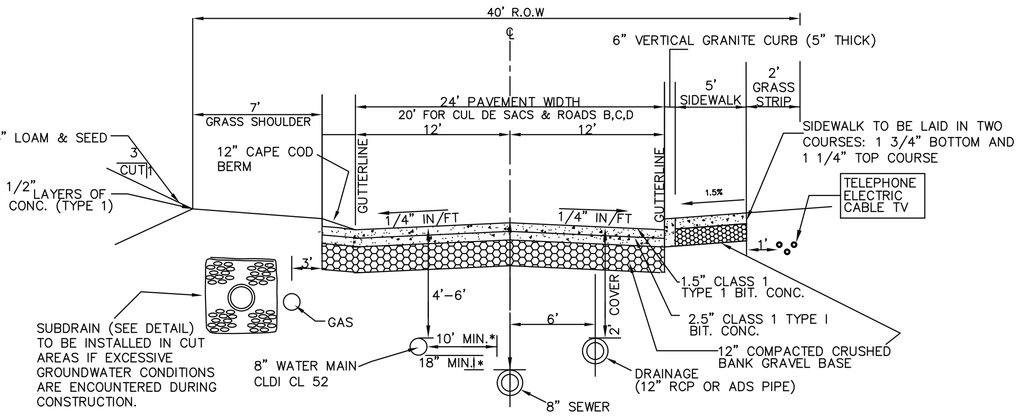

*IF LESS THAN 10' HORIZONTAL SEPARATION BETWEEN WATER & SEWER, EACH PIPE SHALL BE LAID IN A SEPARATE TRENCH. SEE OTHER NOTES ON SHEET 2

TYPICAL ROADWAY CROSS SECTION FOR SUBDIVISION SINGLE FAMILY LOTS

NOT TO SCALE

BOX CULVERT DESIGN NOTES

1. STRUCTURAL ENGINEERED PLANS & DETAILS TO BE PROVIDED PRIOR TO CONSTRUCTION
2. ALL UNSUITABLE MATERIAL SUCH AS ORGANIC LAYERS SHALL BE REMOVED BENEATH FOOTING .
3. BOX CULVERT CALCULATIONS PER MASSACHUSETTS STREAM CROSSING GUIDELINES;

OPENNESS RATIO = (CROSS SECTIONAL AREA) / LENGTH = > 0.82
= (3.5' X 12') / 45' = 0.93
MIN. SPAN= 1.2 X BANKFULL WIDTH = 1.2 X 10' = 12'
*BANKFULL WIDTH TO BE CONFIRMED

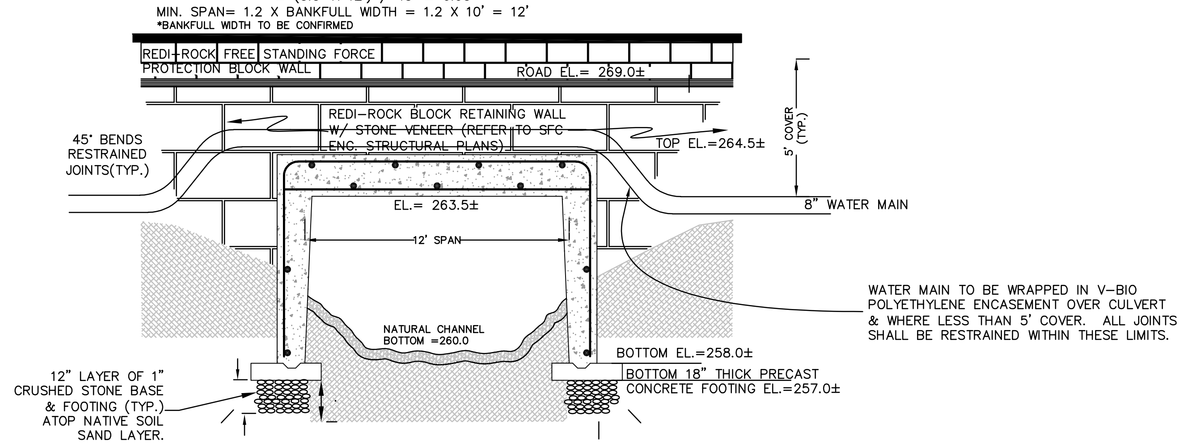

12'W X 45'L 3-SIDED BOX CULVERT AT EAST ROAD A STATION 8+00± DETAIL

NOT TO SCALE

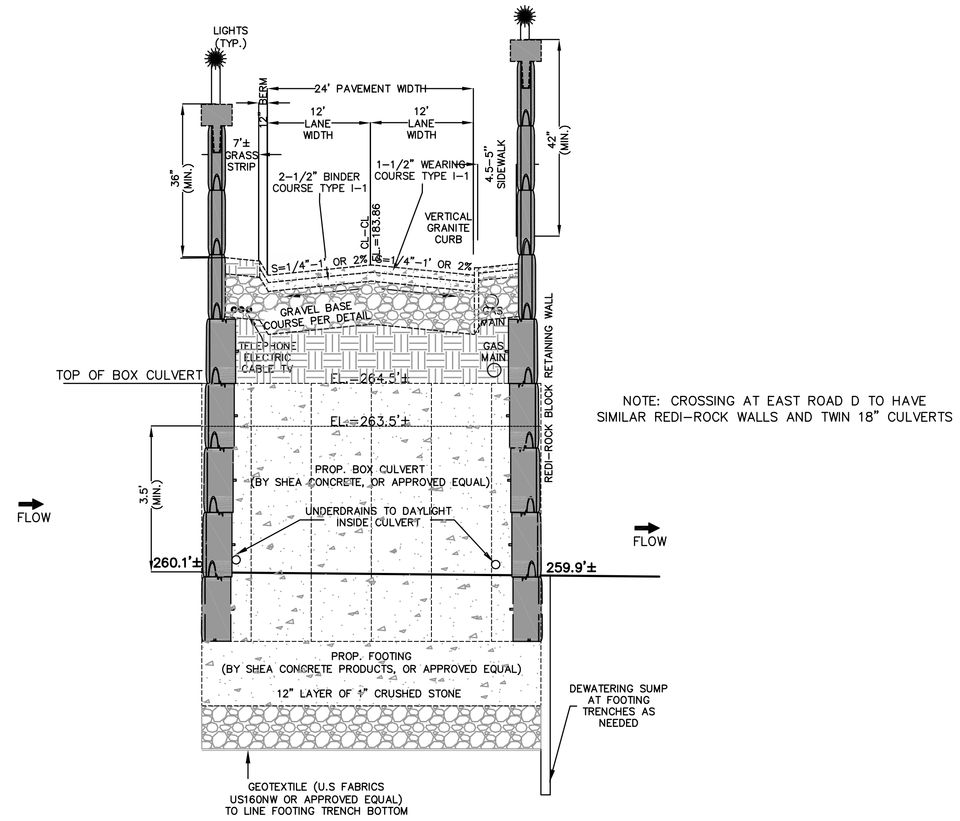

NOTE: CROSSING AT EAST ROAD D TO HAVE SIMILAR REDI-ROCK WALLS AND TWIN 18" CULVERTS

BOX CULVERT & RETAINING WALL DETAIL EAST SIDE ROAD A STA 8+00

NOT TO SCALE

NOTE:
1). TRENCH SHALL BE A MIN. OF 3' IN WIDTH PER TOWN OF MEDWAY STANDARDS.
2). TRENCH SHALL BE 5' MAX. DEPTH FOR STEEP SIDED SECTION
3). TRENCH SHALL BE PROVIDED WITH 6" MIN. CRUSHED STONE BEDDING PER TOWN OF MEDWAY.

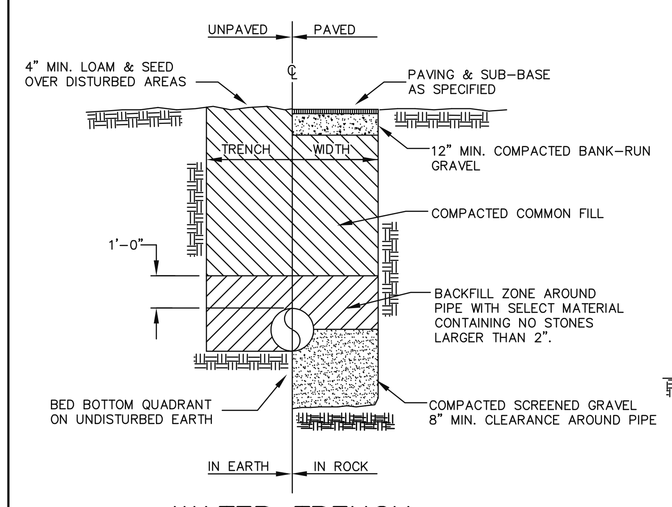

WATER TRENCH

NOT TO SCALE

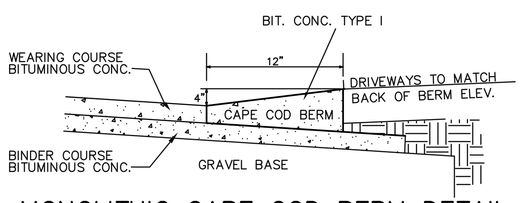

MONOLITHIC CAPE COD BERM DETAIL

NOT TO SCALE

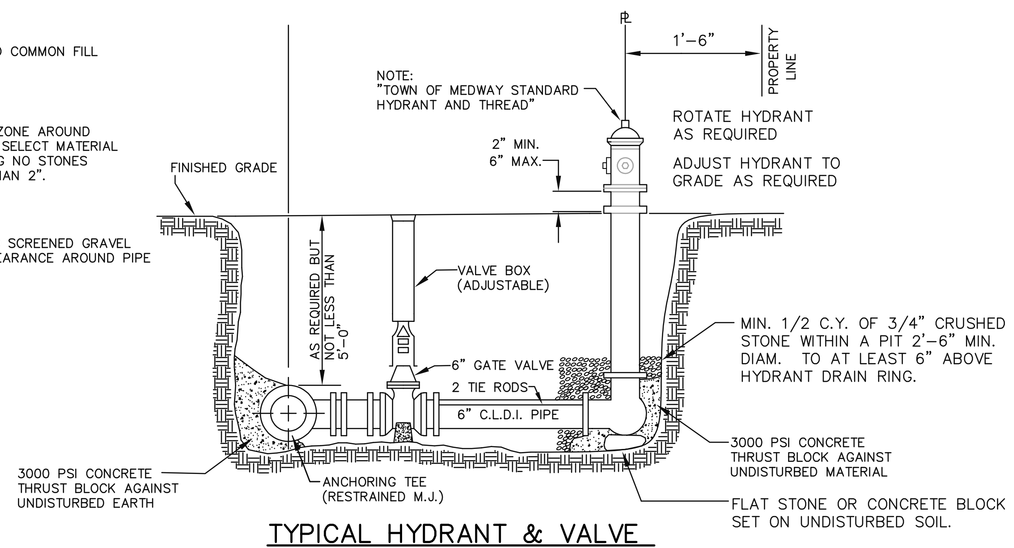

TYPICAL HYDRANT & VALVE

NOT TO SCALE

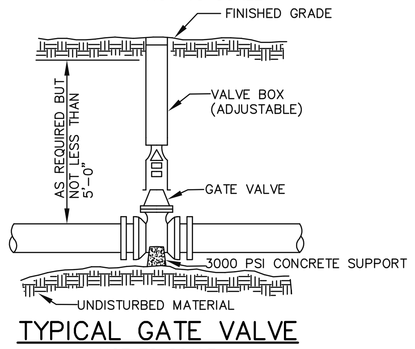

TYPICAL GATE VALVE

NOT TO SCALE

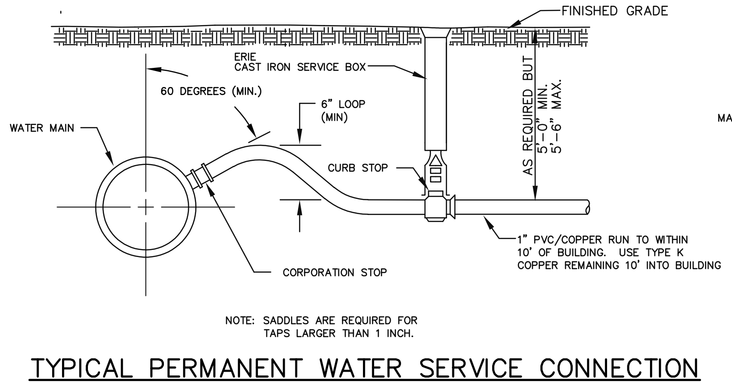

NOTE: SADDLES ARE REQUIRED FOR TAPS LARGER THAN 1 INCH.

TYPICAL PERMANENT WATER SERVICE CONNECTION

NOT TO SCALE

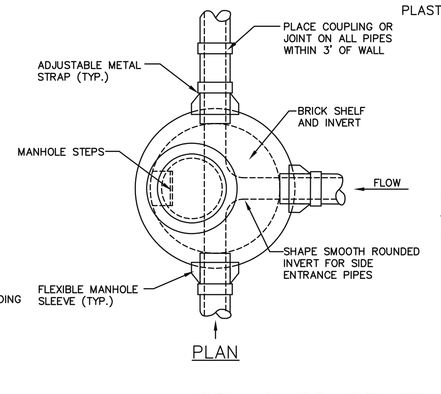

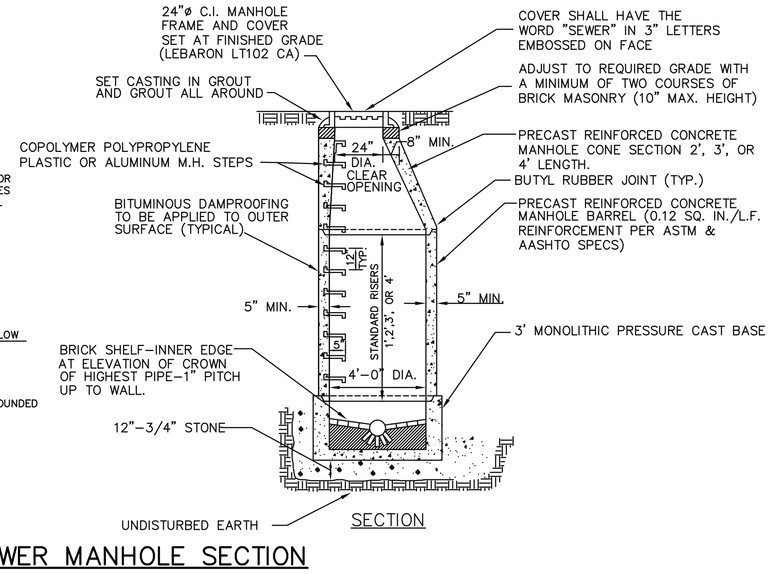

STANDARD SEWER MANHOLE SECTION

NOT TO SCALE

WATER AND SEWER NOTES:

1. ALL CONSTRUCTION SHALL CONFORM TO TOWN OF MEDWAY WATER/SEWER DEPARTMENT RULES & REGULATIONS.
2. SEWER MAINS SHALL BE CLEANED AND TESTED BEFORE ACCEPTANCE. SOIL, CONSTRUCTION DEBRIS, AND OTHER MATERIALS SHALL BE PREVENTED FROM ENTERING THE SYSTEM.
3. WATER MAINS SHALL BE LOCATED A MINIMUM OF 10' HORIZONTALLY FROM SEWER MAINS, AND SHALL BE INSTALLED WITH A VERTICAL SEPARATION OF 18" ABOVE THE SEWER.
4. IF THE 10' HORIZONTAL SEPARATION CANNOT BE MET, THEN THE WATER AND SEWER MUST BE LAID IN SEPERATE TRENCHES.
5. IF A SEWER MUST CROSS ABOVE A WATER MAIN, THEN BOTH LINES SHALL BE DUCTIL IRON WITH MECHANICAL JOINTS AND SHALL BE ENCASED IN CONCRETEA DISTANCE OF 10' MINIMUM BEYOND THE CROSSING. BOTH LINES SHALL BE PRESSURE TESTED TO ENSURE WATER TIGHTNESS.
6. IF A SEWER MUST CROSS ABOVE A WATER SERVICE, THEN THE SEWER MAIN SHALL BE DUCTILE IRON WITH MECHANICAL JOINTS, AND BOTH LINES SHALL BE ENCASED IN CONCRETE A DISTANCE OF 10' MINIMUM BEYOND THE CROSSING.

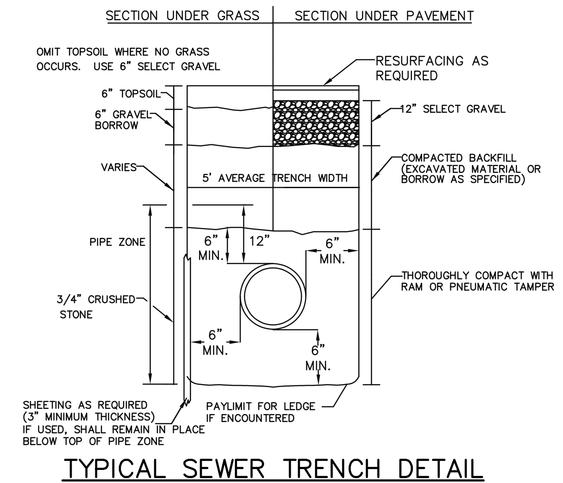

TYPICAL SEWER TRENCH DETAIL

NOT TO SCALE

NOTES:
1. INCLUDES HOUSE SERVICES
2. EXISTING PAVEMENT SHALL BE SAW CUT BEFORE TRENCH EXCAVATION
3. PAY WIDTH EQUALS 5 FEET

REVISIONS

NO.	DATE	DESCRIPTION

OWNERS

WICKETT DEVELOPMENT INC.
38746 CLINTON AVENUE
DADE CITY, FL 33525
ASSESSORS MAP 8, LOT 16 & MAP 9, LOT 58

HENRY L. WICKETT
38746 CLINTON AVENUE
DADE CITY, FL 33525
ASSESSORS MAP 8, LOTS 19 & 20, ASSESSORS MAP 9, LOT 6

HENRY L. WICKETT &
HENRY L. WICKETT JR.
38746 CLINTON AVENUE
DADE CITY, FL 33525
ASSESSORS MAP 14, LOT 5

NOVUS HOMES LLC.
400 FOXBORO BLVD. UNIT 8306
FOXBOROUGH, MA 02035
ASSESSORS MAP 14, LOT 20

TIMBER CREST ESTATES LLC
C/O MOUNIR TAYARA
135 MAIN STREET, SUITE 5
MEDWAY MA, 02053
ASSESSORS MAP 15, LOT 1
ASSESSORS MAP 9, LOT 51

DOROTHY PAVLIK, ET AL
134 HOLLISTON STREET
MEDWAY, MA 02053
ASSESSORS MAP 15, LOT 19

APPLICANT

TIMBER CREST ESTATES LLC
c/o MOUNIR TAYARA
135 MAIN STREET, SUITE 5
MEDWAY MA, 02053

DETAIL SHEET "TIMBER CREST ESTATES" OFF WINTHROP STREET, OHLSON CIRCLE, HOLLISTON STREET, FAIRWAY LANE & FERN PATH IN MEDWAY MASSACHUSETTS

Outback Engineering Incorporated
165 EAST GROVE STREET
MIDDLEBOROUGH, MA 02346
TEL: (508)-946-9231
FAX: (508)-947-8873
www.outback-eng.com

DATE: AUGUST 26, 2016
DRAWN BY: CJV | CHECKED BY: JAP
SCALE: | SHEET 8 OF 9

OE-2765

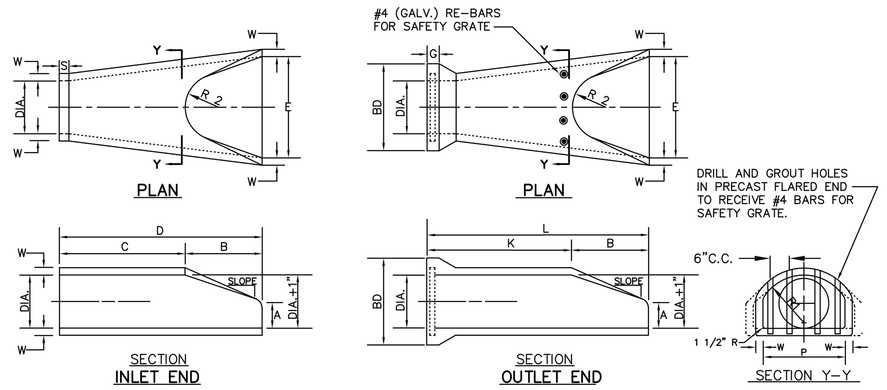

DIA.	W	A	B	C	D	E	BD	K	L	P	DIA. + 1"	R1	R2	S	G	SLOPE
12"	2"	4"	2'-0"	4'-0 7/8"	6'-1 3/8"	2'-0"	20"	4'-6 1/8"	6'-6 1/8"	19 15/16"	13"	10 1/8"	9"	4"	2 1/2"	3:1
18"	2 1/2"	9"	2'-3"	3'-10"	6'-1"	3'-0"	28"	4'-3 7/8"	6'-6 7/8"	29"	19"	15 1/2"	12"	4"	2 3/4"	3:1
24"	3"	9 1/2"	3'-7 1/2"	2'-6"	6'-1"	4'-0"	36"	3'-0 1/2"	6'-8"	33 3/16"	25"	16 13/16"	14"	4"	3"	3:1

NOTE: ALL FLARED ENDS MUST BE RCP (ADS FLARED END ARE NOT ALLOWED)

REINFORCED CONCRETE PIPE FLARED ENDS FOR BELL AND SPIGOT PIPE

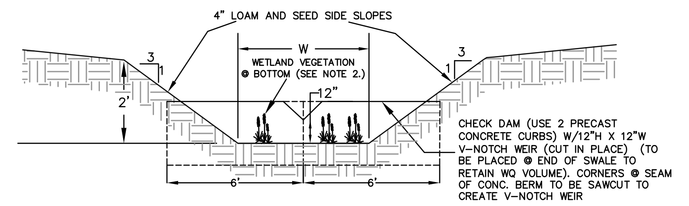

NOTES:
1. SWALE TO BE STABILIZED WITH EROSION CONTROL BLANKETS UNTIL STABILIZED, AS NECESSARY. BLANKETS MUST BIODEGRADE WITHIN ONE YEAR OF PLACEMENT.
2. BOTTOM OF SWALE TO BE LINED WITH EITHER 6 INCHES OF CLAY, OR SILT LOAM OR FINER MATERIAL TO PREVENT DRAWDOWN AND PROMOTE WETLAND VEGETATION GROWTH. BENTONITE OR POLYVINYL LINERS MAY ALSO BE USED (SEE BELOW)
3. USE COMMERCIALLY AVAILABLE WETLAND SEED MIX AT THE BOTTOM OF SWALES (NEW ENGLAND WETLAND PLANTS, INC, "WETMIX" OR APPROVED EQUIVALENT) APPLIED AT A RATE OF 1 POUND OF SEED PER 2500 S.F. OF BOTTOM AREA.

WATER QUALITY SWALE (WET SWALE) CROSS-SECTION

NOT TO SCALE

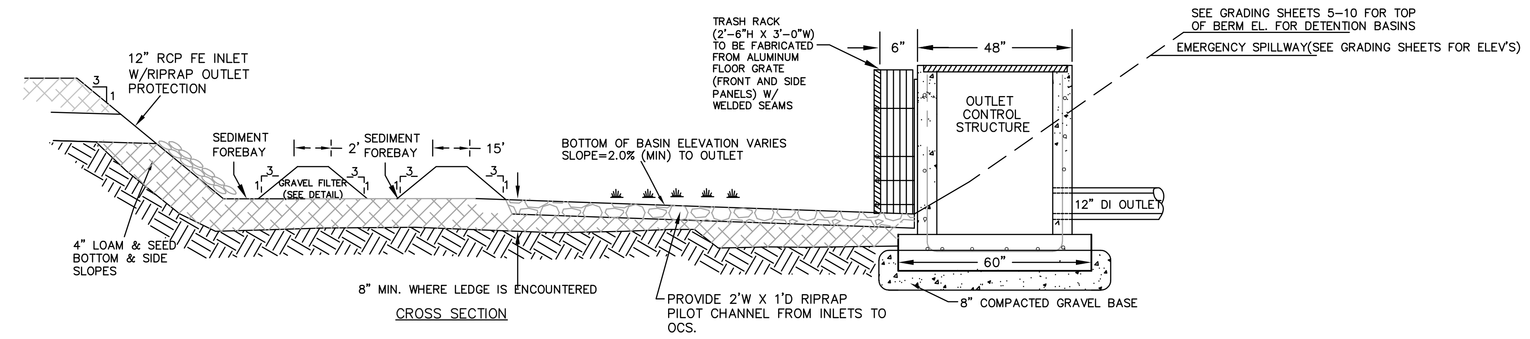

NOTE: SEE WATER QUALITY SWALE DETAIL ABOVE

DETENTION BASIN WITH OUTLET CONTROL STRUCTURE

NOT TO SCALE

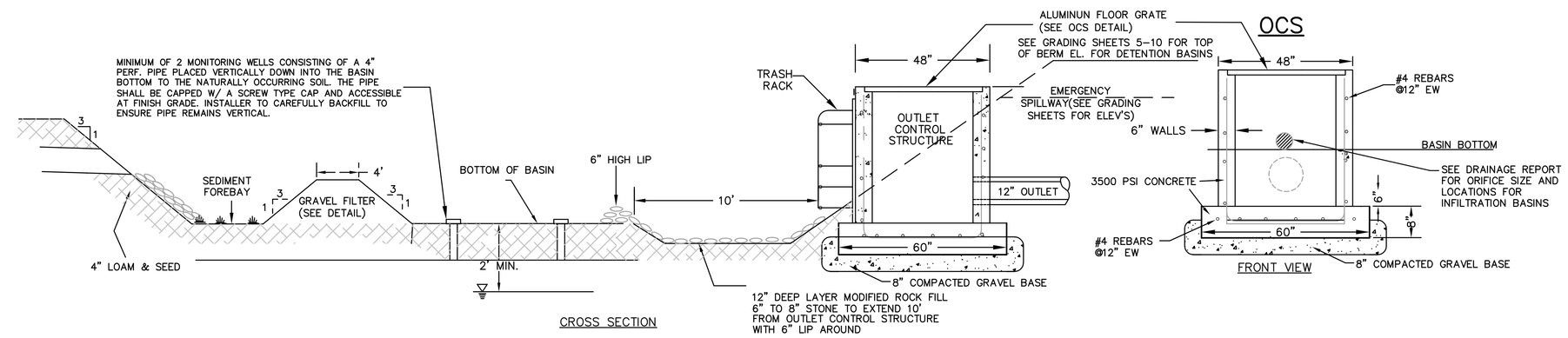

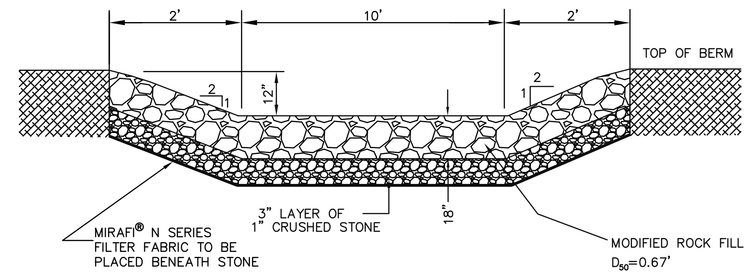

EMERGENCY SPILLWAY

NOT TO SCALE

SPILLWAY NOTES:

1. A WELL GRADED MIXTURE OF ROCK SIZES SHALL BE USED FOR THE STONE. FIFTY PERCENT BY WEIGHT OF THE STONE MIXTURE SHALL BE SMALLER THEN THE MEDIAN SIZE STONE (d50). THE LARGEST STONE SIZE IN THE MIXTURE SHALL BE 1.5 TIMES THE d50 SIZE (12").

2. STONES FOR RIP RAP SHALL BE ANGULAR OR SUBANGULAR. THE STONES SHALL BE SHAPED SO THAT THE LEAST DIMENSION OF THE STONE FRAGMENT SHALL NOT BE LESS THAN ONE- THIRD OF THE GREATEST DIMENSION OF THE FRAGMENT. FLAT ROCKS SHALL NOT BE USED FOR RIP RAP.

3. STONE FOR THE RIP RAP MAY BE PLACED BY EQUIPMENT AND SHALL BE CONSTRUCTED TO THE FULL LAYER THICKNESS IN ONE OPERATION AND IN SUCH A MANNER AS TO PREVENT DISPLACEMENT OF THE UNDERLYING MATERIALS. HAND PLACEMENT MAY BE REQUIRED TO PREVENT DAMAGE TO ANY PERMANENT STRUCTURES.

4. VOIDS IN THE ROCK RIP RAP SHOULD BE FILLED WITH SPALLS AND SMALLER ROCKS.

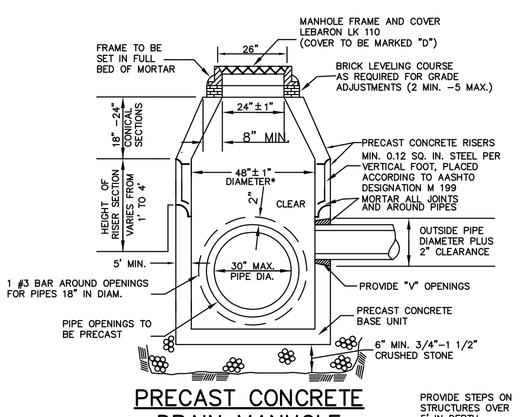

PRECAST CONCRETE DRAIN MANHOLE

NOT TO SCALE
(FOR PIPES UP TO 30" DIAM.)

*NOTE: OIL SEPARATING MANHOLES SHALL BE 6' DIAMETER (SEE DETAIL)

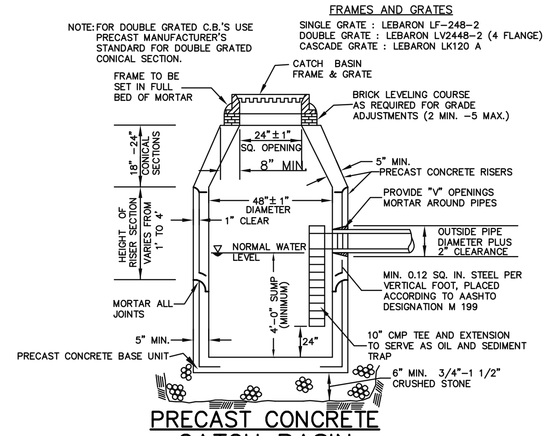

PRECAST CONCRETE CATCH BASIN

NOT TO SCALE

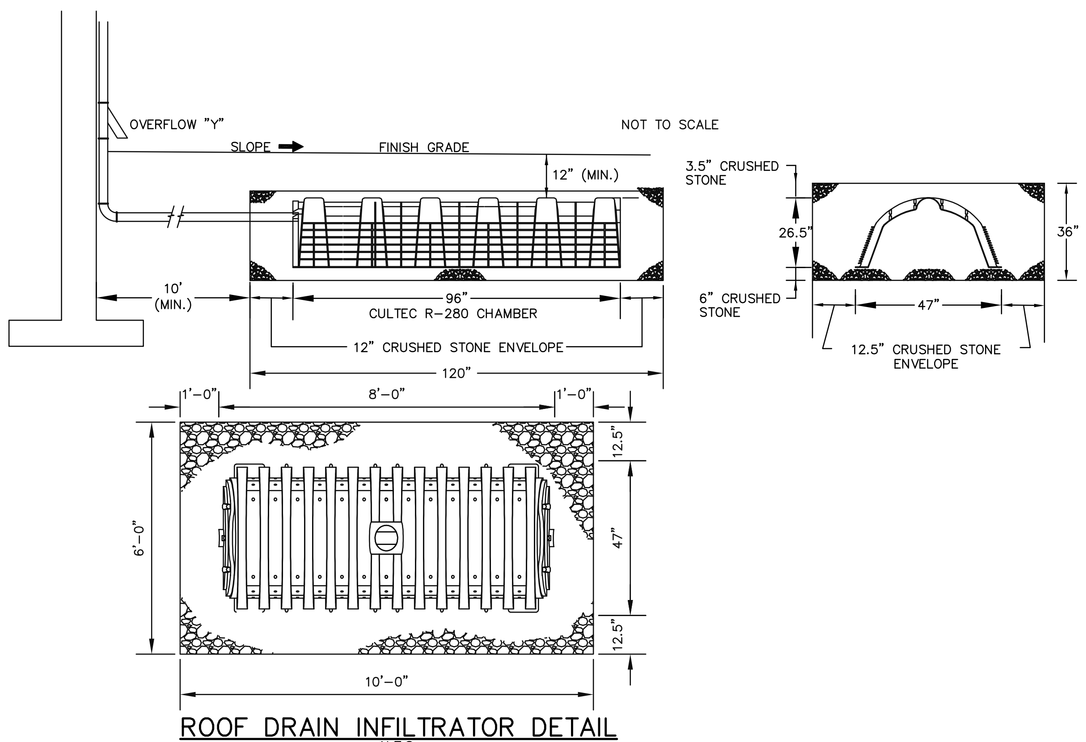

NOT TO SCALE

ROOF DRAIN INFILTRATOR DETAIL

N.T.S.

NOTES:
1. CULTEC R-280 CHAMBERS TO BE INSTALLED PER THIS DETAIL AND MANUFACTURER'S SPECIFICATIONS.
2. ROOF DRAIN SYSTEMS TO BE INSTALLED TO CAPTURE REAR ROOF AREAS AT LOTS 19-28 AND LOTS 35-48 AND ALL CONDOMINIUM UNITS.

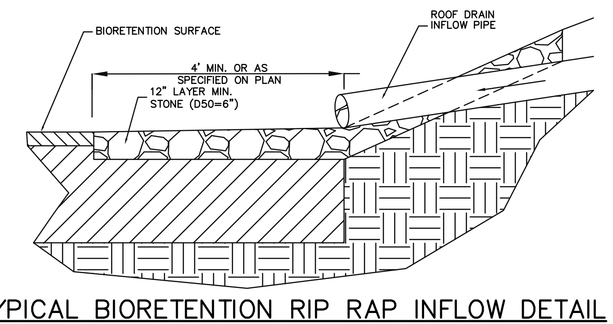

TYPICAL BIORETENTION RIP RAP INFLOW DETAIL

NOT TO SCALE

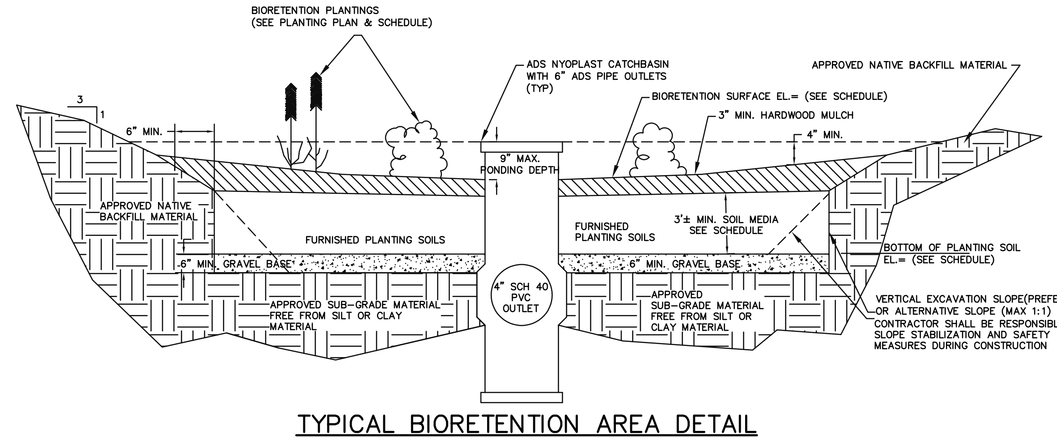

TYPICAL BIORETENTION AREA DETAIL

NOT TO SCALE

REVISIONS

NO.	DATE	DESCRIPTION

OWNERS

WICKETT DEVELOPMENT INC.
38746 CLINTON AVENUE
DADE CITY, FL 33525
ASSESSORS MAP 8, LOT 16 &
MAP 9, LOT 58

HENRY L. WICKETT
38746 CLINTON AVENUE
DADE CITY, FL 33525
ASSESSORS MAP 8, LOTS 19 & 20,
ASSESSORS MAP 9, LOT 6

HENRY L. WICKETT &
HENRY L. WICKETT JR.
38746 CLINTON AVENUE
DADE CITY, FL 33525
ASSESSORS MAP 14, LOT 5

NOVUS HOMES LLC.
400 FOXBORO BLVD. UNIT 8306
FOXBOROUGH, MA 02035
ASSESSORS MAP 14, LOT 20

TIMBER CREST ESTATES LLC
C/O MOUNIR TAYARA
135 MAIN STREET, SUITE 5
MEDWAY MA, 02053
ASSESSORS MAP 15, LOT 1
ASSESSORS MAP 9, LOT 51

DOROTHY PAVLIK, ET AL
134 HOLLISTON STREET
MEDWAY, MA 02053
ASSESSORS MAP 15, LOT 19

APPLICANT

TIMBER CREST ESTATES LLC
c/o MOUNIR TAYARA
135 MAIN STREET, SUITE 5
MEDWAY MA, 02053

DETAIL SHEET "TIMBER CREST ESTATES" OFF WINTHROP STREET, OHLSON CIRCLE, HOLLISTON STREET, FAIRWAY LANE & FERN PATH IN MEDWAY MASSACHUSETTS

Outback Engineering Incorporated
165 EAST GROVE STREET
MIDDLEBOROUGH, MA 02346
TEL: (508)-946-9231
FAX: (508)-947-8873
www.outback-eng.com

DATE: AUGUST 26, 2016	
DRAWN BY: CJV	CHECKED BY: JAP
SCALE:	SHEET 9 OF 9

OE-2765

EXHIBIT B

Bk 34358 Pg264 #80216
08-12-2016 @ 02:51p

MASSACHUSETTS STATE EXCISE TAX
Norfolk Registry of Deeds
Date: 08-12-2016 @ 02:51pm
Ctl#: 1473 Doc#: 80216
Fee: $1,732.80 Cons: $380,000.00

RECEIVED AND RECORDED
NORFOLK COUNTY
REGISTRY OF DEEDS
DEDHAM, MA

CERTIFY
William P O'Donnell
WILLIAM P. O'DONNELL, REGISTER

MASSACHUSETTS QUITCLAIM DEED

We, Peter R. Monego and Debbie A. Monego f/k/a Debbie A. Jellyman, husband and wife, of Medway, Norfolk County, Massachusetts

for consideration paid, and in full consideration of Three Hundred Eighty Thousand ($380,000.00) Dollars

Grant to Timber Crest, LLC, a Massachusetts limited liability company with a principal place of business at 135 Main Street, Suite 5, Medway, Massachusetts

with quitclaim covenants

The land in Medway, Norfolk County, Massachusetts, with the buildings thereon, situated on the westerly side of Holliston Street shown as Lot B on a plan entitled "Plan of Land in Medway, Property of Gustave Staller, Scale of 60 feet to an inch, July 22, 1950", by Schofield Brothers, Registered Civil Engineers, Framingham and Orleans, Mass., recorded with Norfolk County Registry of Deeds in Book 2945, Page 230, bounded and described as follows:

EASTERLY	by said Holliston Street, 143.64 feet;
NORTHERLY	by land now or formerly of JosephW. Ewing, 1,239.22 feet;
WESTERLY	by land formerly of the heirs of Nathan Twiss, 258.50 feet;
SOUTHERLY	by land now or formerly of George Dill, 1,071.86 feet;
EASTERLY	by Lot A as shown on said plan, 135.00 feet; and
SOUTHERLY	by Lot A, 200.00 feet.

Said premises contain 7.4 acres, more or less, according to said plan.

PROPERTY ADDRESS: 165 Holliston Street, Medway, Massachusetts

The above-described premises are conveyed subject to a water extension agreement with the Town of Medway dated November 14, 1952, recorded with Norfolk County Registry of Deeds in Book 3131, Page 240.

Grantor (or undersigned) hereby release any rights of Homestead and swear under the penalties of perjury that there are no persons entitled to protection under the Massachusetts Homestead statute residing in the premises.

Meaning and intending to convey and hereby conveying all and the same premises conveyed to the within grantor by Deed dated December 18, 2010 and recorded with the Norfolk County Registry of Deeds in Book 28465, Page 545.

Witness our hands and seals this 12th day of **August,** 2016.

Peter R. Monego

Debbie A. Monego f/k/a
Debbie A. Jellyman

The Commonwealth of Massachusetts

Bristol, ss

On this 12th day of August, 2016, before me, the undersigned notary public, personally appeared Peter R. Monego and Debbie A. Monego f/k/a Debbie a. Jellyman, proved to me through satisfactory evidence of identification, which was ☒ photographic identification with signature issued by a federal or state governmental agency, ☐ oath or affirmation of a credible witness, ☐ personal knowledge of the undersigned to be the persons whose names are signed on the preceding or attached document, and acknowledged to me that they signed it voluntarily for its stated purpose and who swore or affirmed to me that the contents of the document are truthful and accurate to the best of their knowledge and belief.

Notary Public – Thomas John Filipek
My commission expires: **May 5, 2017**